PART NO.	TERMINAL TYPE	WIRE DIA.	"A"	"B"	"C"	"D" REF	"E"	"F"	"G"	"H" REF	"J" REF	"K"	U.L. CAT. NO.
OS-187	STRAIGHT TYPE 187 SERIES	3.6 [9/64]	8.8 [.346]	6.1 [.240]	2.7 [.106]	2.6 [.102]	6.8 [.268]	1 [.039]	3.9 [.154]	15.1 [.594]	1.8 [.071]	7.5 [.295]	51A
OS-250	STRAIGHT TYPE 250 SERIES	3.8 [5/32]	9.8 [.386]	7.9 [.311]	3.4 [.164]	2.8 [.110]	8 [.315]		4.7 [.185]	18.5 [.728]	2.05 [.081]	9.1 [.358]	50B

AVAILABLE BY SPECIAL ORDER ONLY

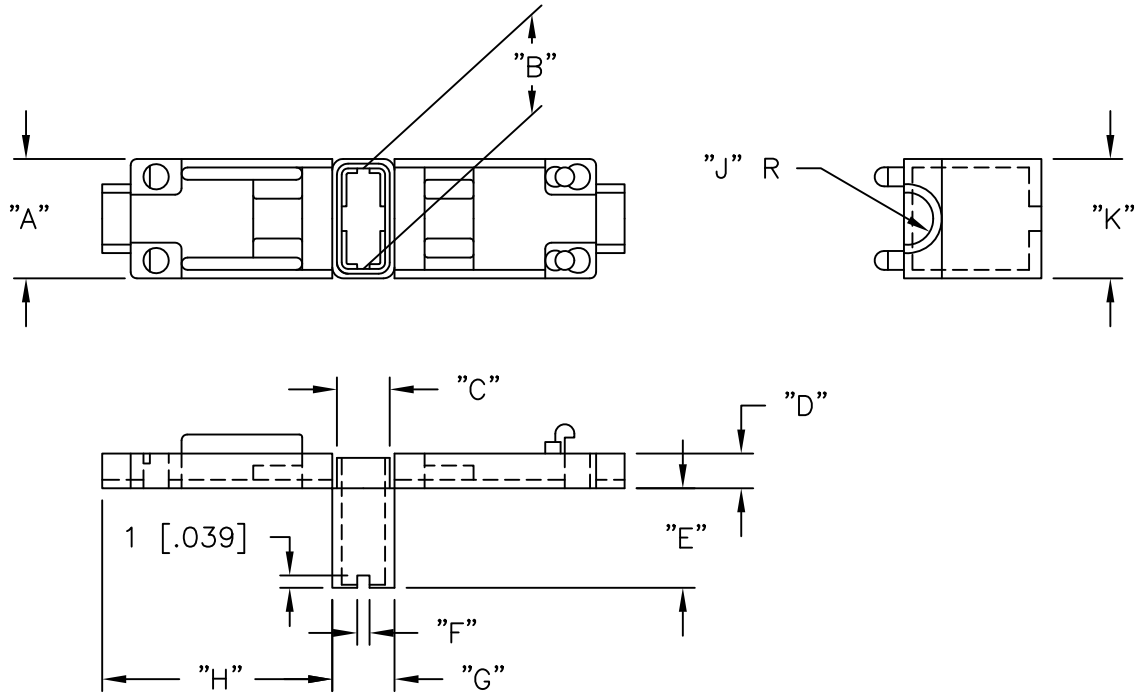

NOTES:
1. MATERIAL: NYLON 6 UL94 V-2, (RMS-120).
2. COLOR: NATURAL.
3. ALTERNATE UNITS FOR REFERENCE ONLY.

REV	DESCRIPTION	ENGR DATE
F	SEE CO 200479 FOR CHANGES	SK 12.15.09
E	SEE CO 200344 FOR CHANGES	SK 03.18.09
D	SEE CO 200041 FOR CHANGES	SK 09.28.07
C	SEE ECN #913 FOR CHANGES	SK 01.12.05
B	RMS-120 WAS RMS-61; CHANGED FILE NO.	SM 10.25.01
A	RMS-61 WAS RMS-28	PB 102794

TITLE: "ONE TOUCH" SLEEVE INSULATOR (OS SERIES)

DWG IN mm [IN]

TOLERANCES UNLESS NOTED ±0.4 ANG=±1°

FILE # OS | DWN: P.B. | DT: 05-10-94 | FINAL

MAT'L: SEE NOTES | CHKD: | ENG:

RE: RICHCO, INC.

RICHCO INC.
ENG@RICHCO-INC.COM
(773) 539-4060

PART # SEE TABLE

PRINT TYPE CA