Board Layout
3:1

1) recommended drill hole Ø0,64±0,01mm
(acc. to IEC 60352-5)
through hole dia. (after plating): Ø0,55±0,05

2) fixing-hole optional
non-metallized drillings

3) use self-tapping screws for plastics
2,2x length,
e.g. HARTING Part.-no.: 09 06 001 9974
(length= pcb thickness + 6,5mm to 10mm)

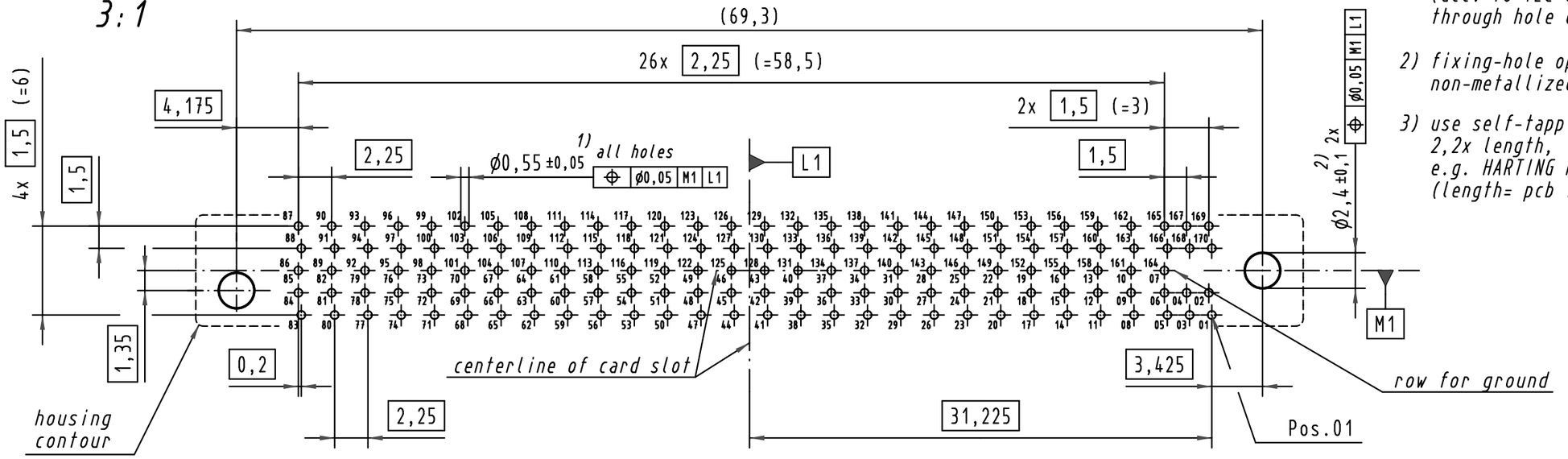

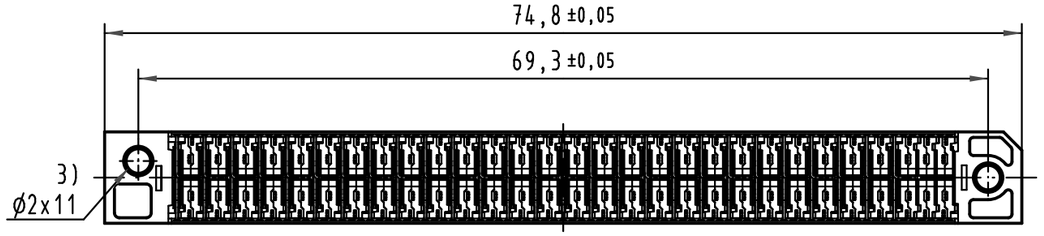

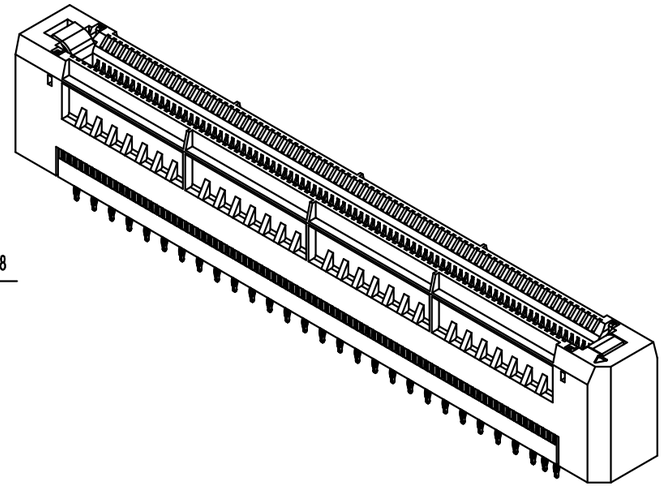

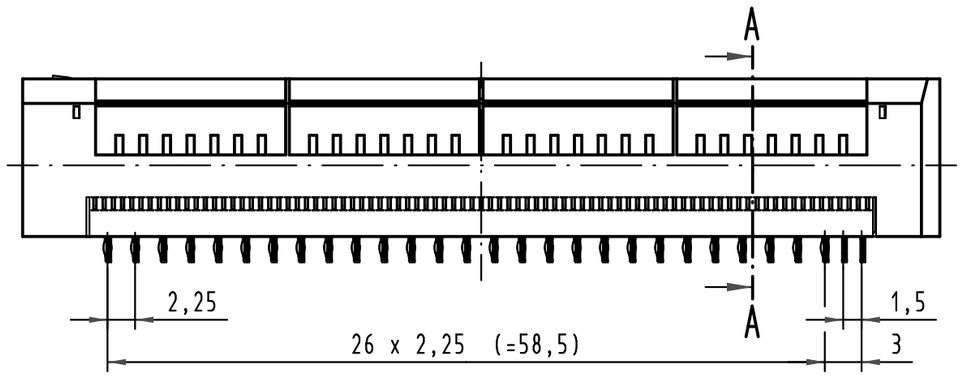

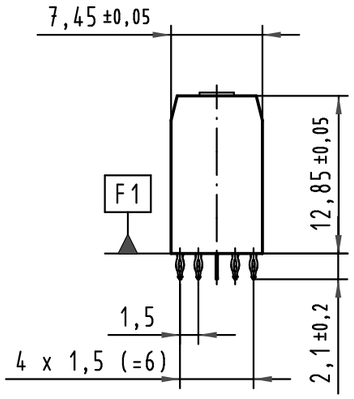

A-A

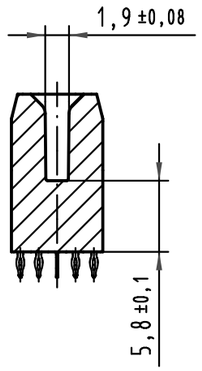

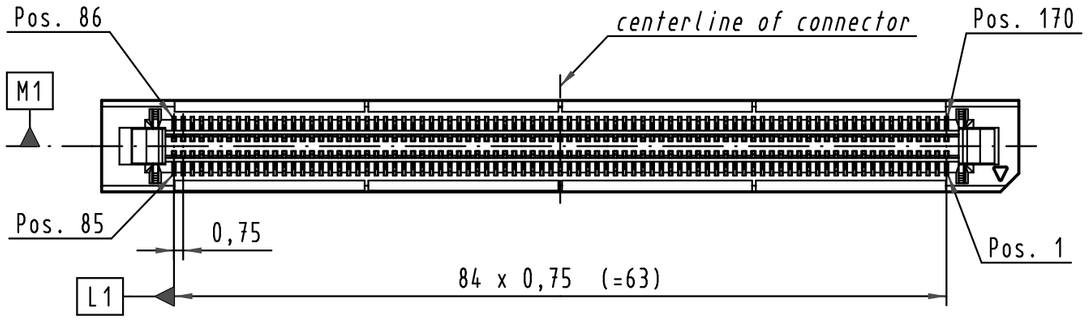

missing dimensions and information acc. to PICMG MicroTCA.0
(Micro Telecommunications Computing Architecture Base Specification)

con:card+

All Dimensions in mm Original Size DIN A 3			Techn. Character.			Nicht tolerierte Maße/ *Free size tolerances*
				Dat.	Name	Maßstab/*Scale*
			Detail.	24.09.09	hsv	2:1
			Insp.	24.09.09	Lue.	3:1
			Stand.			**AdvancedMC connector for MicroTCA 170 pole, press-fit with protection shield**
35928			HARTING Electronics GmbH & Co. KG D-32339 ESPELKAMP			TB 16 11 170 5205 000
Mod.	Dat.	Name				Sub.
						Blatt/ *page*

Alle Rechte vorbehalten/ All rights reserved