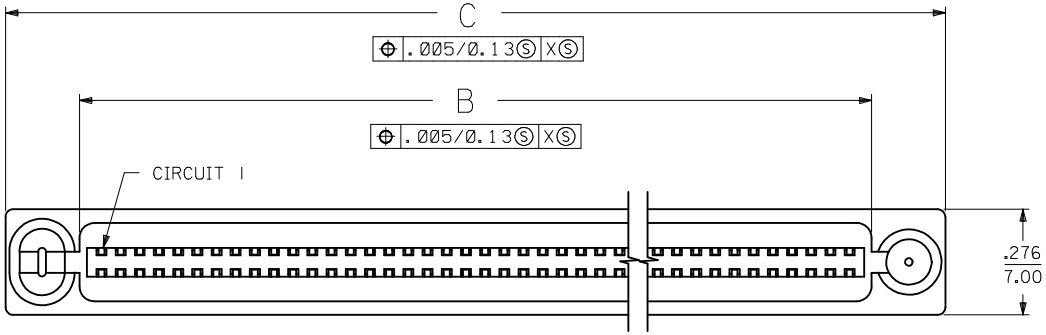

NOTES:

1) MATERIALS:
   HOUSING- LCP, GLASS FILLED, 94V-0, BLACK.
   TERMINALS- COPPER ALLOY

2) FINISH:
   TERMINALS:
   .000030/(0.00076) MINIMUM GOLD IN CONTACT AREA AND
   .000050/(0.00127) MINIMUM TIN IN TAIL AREA OVER
   .000075/(0.00191) MINIMUM NICKEL UNDERPLATE OVERALL.

3) ASSEMBLY MATES WITH MOLEX P/N SDA-71661-7***.
   CONFORMS TO PRODUCT SPECIFICATION PS-71660.

4) MINIMUM RECOMMENDED SOLDER TAIL LENGTH (E) IS PCB THICKNESS + 0.020" (0.50MM)
   REFER TO IPC-610 FOR MAXIMUM TAIL LENGTH

5) FOUR DIGIT DATE CODE TO BE LOCATED ON SURFACE AS SHOWN.

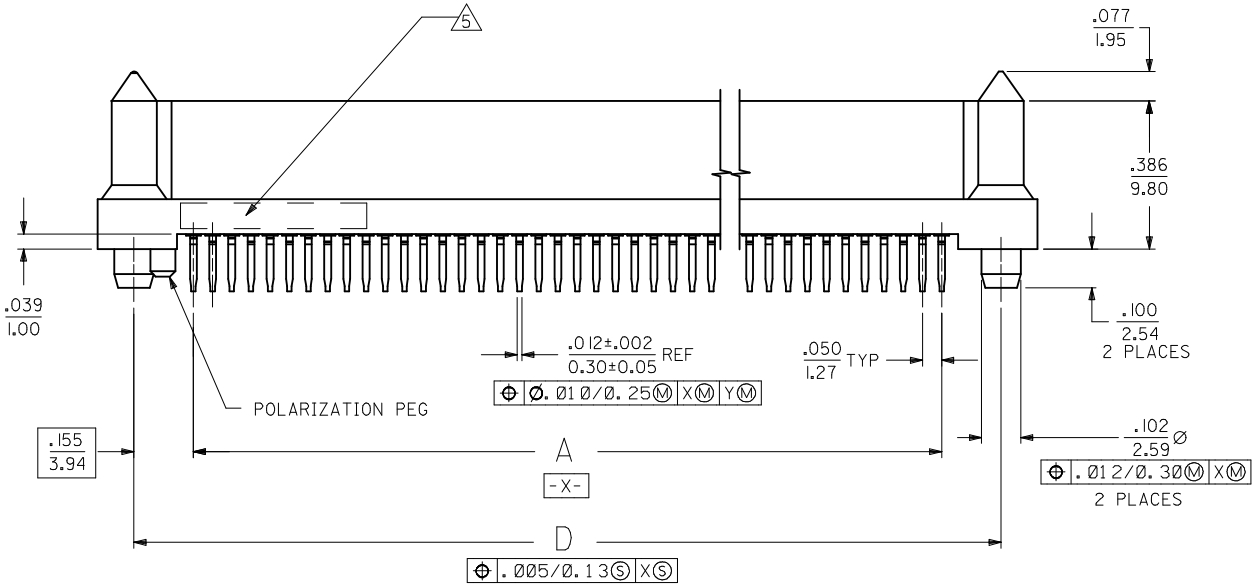

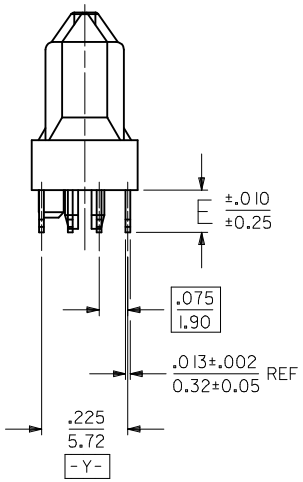

RECOMM TAIL LENGTH	EC NO: UCP2016-4844	DRWN:MPOFF 2016/06/22	CH'KD:DMORGAN 2016/06/22	APPR:DMCGOWAN 2016/06/28
DESCRIPTION			
REV	O		

QUALITY SYMBOLS
F =0
E =0
P =0

GENERAL TOLERANCES (UNLESS SPECIFIED)

	mm	INCH
4 PLACES	± ---	± ---
3 PLACES	± ---	± .005
2 PLACES	± .13	± ---
1 PLACE	± ---	± ---
0 PLACE	± ---	± ---
ANGULAR ±1/2°		

DRAFT WHERE APPLICABLE MUST REMAIN WITHIN DIMENSIONS

DIMENSION STYLE: IN/MM
SCALE
DESIGN UNITS: INCH
THIRD ANGLE PROJECTION

DRAWN BY	MPOFF	DATE 2016/06/22
CHECKED BY	RAN	DATE 1993/11/17
APPROVED BY		DATE

TITLE: EBBI 50D VERTICAL RCPT BLIND MATE CONNECTOR SALES ASSEMBLY

molex

MATERIAL NO.: SEE TABLE
DOCUMENT NO.: SDA-71660-7***
SHEET NO.: 1 OF 2
SIZE: C

THIS DRAWING CONTAINS INFORMATION THAT IS PROPRIETARY TO MOLEX INCORPORATED AND SHOULD NOT BE USED WITHOUT WRITTEN PERMISSION

ITEM NUMBER	CKT ("N")	A	B	C	D	E
71660-7030	30	.700 (17.78)	.815 (20.70)	1.199 (30.45)	1.010 (25.65)	.110 (2.79)
71660-7040	40	.950 (24.13)	1.065 (27.05)	1.449 (36.80)	1.260 (32.00)	
71660-7050	50	1.200 (30.48)	1.315 (33.40)	1.699 (43.15)	1.510 (38.35)	
71660-7060	60	1.450 (36.83)	1.565 (39.75)	1.949 (49.50)	1.760 (44.70)	
71660-7068	68	1.650 (41.91)	1.765 (44.83)	2.149 (54.58)	1.960 (49.78)	
71660-7080	80	1.950 (49.53)	2.065 (52.45)	2.449 (62.20)	2.260 (57.40)	
71660-7100	100	2.450 (62.23)	2.565 (65.15)	2.949 (74.90)	2.760 (70.10)	
71660-7120	120	2.950 (74.93)	3.065 (77.85)	3.449 (87.60)	3.260 (82.80)	
71660-7130	130	3.200 (81.28)	3.315 (84.20)	3.699 (93.95)	3.510 (89.15)	
71660-7230	30	.700 (17.78)	.815 (20.70)	1.199 (30.45)	1.010 (25.65)	.134 (3.40)
71660-7240	40	.950 (24.13)	1.065 (27.05)	1.449 (36.80)	1.260 (32.00)	
71660-7250	50	1.200 (30.48)	1.315 (33.40)	1.699 (43.15)	1.510 (38.35)	
71660-7260	60	1.450 (36.83)	1.565 (39.75)	1.949 (49.50)	1.760 (44.70)	
71660-7268	68	1.650 (41.91)	1.765 (44.83)	2.149 (54.58)	1.960 (49.78)	
71660-7280	80	1.950 (49.53)	2.065 (52.45)	2.449 (62.20)	2.260 (57.40)	
71660-7300	100	2.450 (62.23)	2.565 (65.15)	2.949 (74.90)	2.760 (70.10)	
71660-7320	120	2.950 (74.93)	3.065 (77.85)	3.449 (87.60)	3.260 (82.80)	
71660-7330	130	3.200 (81.28)	3.315 (84.20)	3.699 (93.95)	3.510 (89.15)	
71660-7630	30	.700 (17.78)	.815 (20.70)	1.199 (30.45)	1.010 (25.65)	.155 (3.94)
71660-7640	40	.950 (24.13)	1.065 (27.05)	1.449 (36.80)	1.260 (32.00)	
71660-7650	50	1.200 (30.48)	1.315 (33.40)	1.699 (43.15)	1.510 (38.35)	
71660-7660	60	1.450 (36.83)	1.565 (39.75)	1.949 (49.50)	1.760 (44.70)	
71660-7668	68	1.650 (41.91)	1.765 (44.83)	2.149 (54.58)	1.960 (49.78)	
71660-7680	80	1.950 (49.53)	2.065 (52.45)	2.449 (62.20)	2.260 (57.40)	
71660-7700	100	2.450 (62.23)	2.565 (65.15)	2.949 (74.90)	2.760 (70.10)	
71660-7720	120	2.950 (74.93)	3.065 (77.85)	3.449 (87.60)	3.260 (82.80)	
71660-7730	130	3.200 (81.28)	3.315 (84.20)	3.699 (93.95)	3.510 (89.15)	

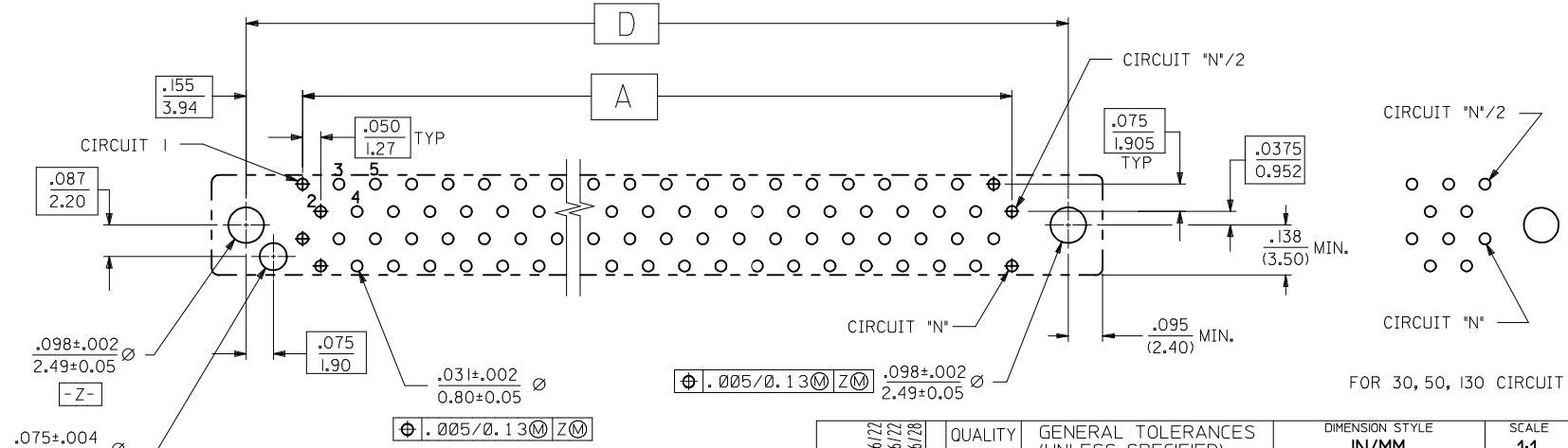

RECOMMENDED PC BOARD LAYOUT
COMPONENT SIDE 4
FOR 40, 60, 68, 80, 100, 120 CIRCUIT SIZES

SEE SHEET 1
EC NO: UCP2016-4844 2016/06/22
DRWN:MPOFF 2016/06/22
CH'KD:DMORGAN 2016/06/28
APPR:DMCGOWAN
DESCRIPTION
REV 0

QUALITY SYMBOLS

GENERAL TOLERANCES (UNLESS SPECIFIED)

	mm	INCH
4 PLACES	± ---	± ---
3 PLACES	± ---	± .005
2 PLACES	± .13	± ---
1 PLACE	± ---	± ---
0 PLACE	± ---	± ---
ANGULAR ±1/2°		

DRAFT WHERE APPLICABLE MUST REMAIN WITHIN DIMENSIONS

DIMENSION STYLE: IN/MM
SCALE: 1:1
DESIGN UNITS: INCH
THIRD ANGLE PROJECTION

DRAWN BY: MPOFF DATE: 2016/06/22
CHECKED BY: RAN DATE: 1993/11/17
APPROVED BY DATE

TITLE: EBBI 50D VERTICAL RCPT BLIND MATE CONNECTOR SALES ASSEMBLY

molex

MATERIAL NO.: SEE TABLE
DOCUMENT NO.: SDA-71660-7***
SHEET NO.: 2 OF 2
SIZE: C

THIS DRAWING CONTAINS INFORMATION THAT IS PROPRIETARY TO MOLEX INCORPORATED AND SHOULD NOT BE USED WITHOUT WRITTEN PERMISSION