N/C	INITIAL RELEASE DCO # 01592	6-5-80	BSF
A	REVISED PER E.O. #D-0916	11/11/82	[illegible]
B	REVISED PER E.C.N. T-5936	1/22/86	[illegible]

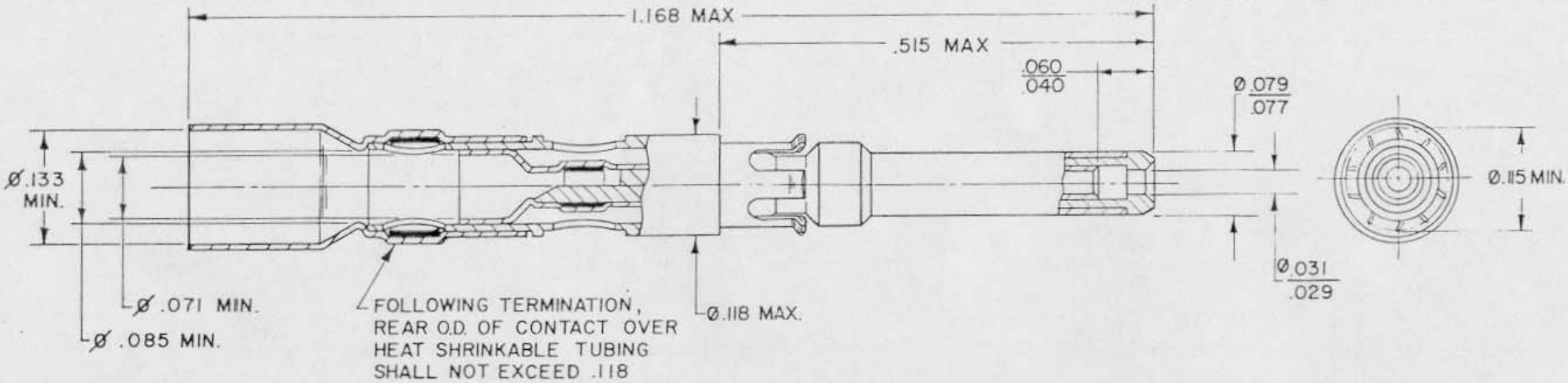

NOTES:

1. THIS CONTACT IS DESIGNED FOR USE IN MIL-C-28748 SIZE 16 CAVITIES.
2. THIS CONTACT IS DESIGNED TO TERMINATE TO THE CABLES IN TABLE. OTHER APPLICATIONS SHOULD BE SUBMITTED TO RAYCHEM FOR EVALUATION.
3. FOR TERMINATION PROCEDURE: SEE ES 61164
4. MATING CONTACT (FOR SIMILAR CABLES) D-602-77

RG CABLE NO.	RAYCHEM CABLE NO.
RG-179 B/U	5026A IXIX
RG-187/U	5030A IXIX
RG-316 /U	7528A IXIX
	7530A IXIX
	9532A IXIX

CONTACT CHARACTERISTICS:

MATERIALS:

CONTACT MEMBERS:	COPPER ALLOY PER QQ-B-626 & QQ-C-530
CONTACT PLATING:	GOLD PER MIL-G-45204, NICKEL PER QQ-N-290 OVER COPPER FLASH.
SPRING MEMBER:	BERYLLIUM COPPER PER QQ-C-533
SPRING PLATING:	NICKEL PER QQ-N-290
DIELECTRIC:	FLUOROPOLYMER.
SOLDER:	SN63 PER QQ-S-571
CABLE SUPPORT TUBING:	POLYVINYLIDENE FLUORIDE

PERFORMANCE:

TEMPERATURE RATING:	125°C. MAXIMUM
CURRENT RATING:	3 AMPS
VOLTAGE RATING:	DIELECTRIC WITHSTAND VOLTAGE, 900 VOLTS RMS, MAXIMUM
CONTACT RESISTANCE:	10 MILLIOHMS MAXIMUM (INNER) 8 MILLIOHMS MAXIMUM (OUTER)

INSULATION RESISTANCE: 5,000 MEGOHMS MINIMUM
ENGAGEMENT FORCE, INNER SOCKET: 6.0 OZ. MAXIMUM.
SEPARATION FORCE, INNER SOCKET: 0.5 OZ. MINIMUM.

CONNECTOR SPECIFICATION CONTROL DRAWING

UNLESS OTHERWISE SPECIFIED DIMENSIONS ARE IN INCHES BRACKETED DIMENSIONS () ARE METRIC AND TOLERANCES ARE:
.XXX ± ( )
.XX ± ( )
∠ ±

DRAWN	DWW	2-15-80
CHECKED		
APPROVED	BSF	6-5-80
APPROVED	[illegible]	6-5-80
APPROVED		

tyco Electronics — Tyco Electronics Corporation, 300 Constitutional Drive, Menlo Park, CA 94025 USA — Raychem

TITLE: SHIELDED CONTACT, PIN COAXIAL CABLE

SIZE	CODE IDENT	DWG. NO
C	NO. 06090	D-602-76

WEIGHT | SHEET | OF

DO NOT SCALE THIS DRAWING

If this document is printed it becomes uncontrolled.
Check for the latest revision.