Crystal Units
Surface Mount Type: Tuning Fork ST3215SB

KYOCERA

3.2×1.5mm for Small Size Mobile Equipment

Pb Free RoHS Compliant

Features

- Small, Low Profile (3.2×1.5×0.75mm)
- Ceramic Package
- Pb Free
- Reflow Compatible

Applications

- Small size mobile equipment

How to Order

ST3215SB 32768 □□ □ □ □ □□
① ② ③ ④ ⑤ ⑥ ⑦

① Series

② Frequency
32.768kHz

③ Load Capacitance

H5	12.5 pF

④ Frequency Stability

H	±20×10⁻⁶

⑤ Operating Temp. Range

P	−40 to +85°C

⑥ Frequency Temp. Stability

W	±200×10⁻⁶

⑦ Individual Specification... Std.Spec. as "ZZ"

Specifications

Item	Symbol	Specification	Units	Remarks
Nominal Frequency	f_{nom}	32.768	kHz	
Frequency Tolerance	f_{tol}	±20	$\times 10^{-6}$	@25°C
Turnover Temperature	Ti	+25±5	°C	
Parabolic Coefficient	B	−0.04 max.	$\times 10^{-6}$	
Motional Resistance	R1	70 max.	k-ohm	
Motional Capacitance	C1	3.3 typ.	fF	
Shunt Capacitance	C0	1.5 typ.	pF	
Load Capacitance	CL	12.5	pF	Please consult us
Drive Level	DL	0.1	μW	
Operating Temp. Range	T_{use}	−40 to +85	°C	
Storage Temp. Range	T_{stg}	−55 to +125	°C	
Frequency Aging	f_{age}	±3	$\times 10^{-6}$	

Dimensions

(Unit: mm)

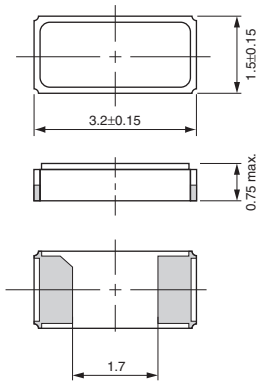

Recommended Land Pattern

(Unit: mm)

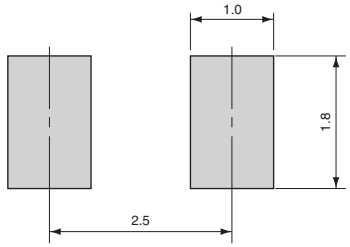

Crystal Units
Surface Mount Type: Tuning Fork ST4115SB

KYOCERA

4.1×1.5mm for Small Size Mobile Equipment

Pb Free RoHS Compliant

Features

- Small, Low Profile (4.1×1.5×0.75mm)
- Ceramic Package
- Pb Free
- Reflow Compatible

Applications

- Small size mobile equipment

How to Order

ST4115SB 32768 □□ □ □ □ □□
① ② ③ ④ ⑤ ⑥ ⑦

① Series

② Frequency
32.768kHz

③ Load Capacitance

H5	12.5 pF

④ Frequency Stability

H	±20×10⁻⁶

⑤ Operating Temp. Range

P	−40 to +85°C

⑥ Frequency Temp. Stability

W	±200×10⁻⁶

⑦ Individual Specification... Std.Spec. as "ZZ"

Specifications

Item	Symbol	Specification	Units	Remarks
Nominal Frequency	f_{nom}	32.768	kHz	
Frequency Tolerance	f_{tol}	±20	$\times 10^{-6}$	@25°C
Turnover Temperature	Ti	+25±5	°C	
Parabolic Coefficient	B	−0.04 max.	$\times 10^{-6}$	
Motional Resistance	R1	65 max.	k-ohm	
Motional Capacitance	C1	2.3 typ.	fF	
Shunt Capacitance	C0	1.5 typ.	pF	
Load Capacitance	CL	12.5	pF	Please consult us
Drive Level	DL	0.1	μW	
Operating Temp. Range	T_{use}	−40 to +85	°C	
Storage Temp. Range	T_{stg}	−55 to +125	°C	
Frequency Aging	f_{age}	±3	$\times 10^{-6}$	

Dimensions

(Unit: mm)

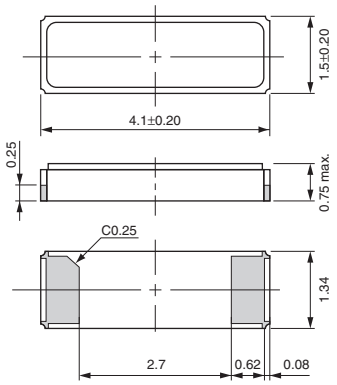

Recommended Land Pattern
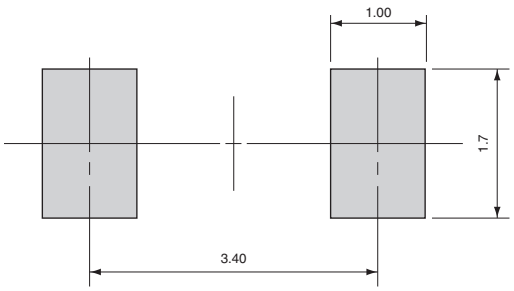
(Unit: mm)