THIS COPY IS PROVIDED ON A RESTRICTED BASIS AND IS NOT TO BE USED IN ANY WAY DETRIMENTAL TO THE INTERESTS OF PANDUIT CORP.

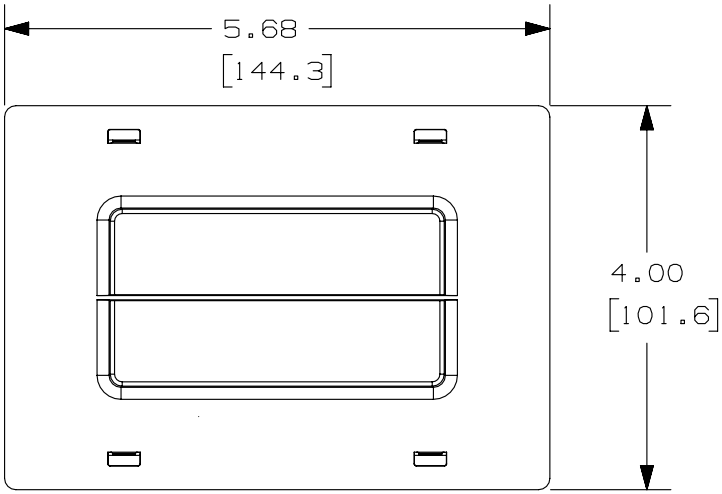

PANDUIT PART NUMBER	WEIGHT
CTCN3X5	58.4 G / EACH .129 LBS / EACH

NOTES:

1. PANDUIT PART NUMBER CTCN3X5 INCLUDES:
   ONE (1) CABINET TOP COVER.
   ONE (1) CABLE PROTECTION BEZEL.
2. FOR USE WITH CABINET 2.0 NET-ACCESS CABINETS.
3. USED TO SEAL OFF 3" X 5" CABINET OPENINGS AFTER KNOCK-OUTS HAVE BEEN REMOVED. CAN ALSO BE USED TO ADD THE CTGN3X5 TO OPENINGS WHERE KNOCK-OUTS HAVE BEEN REMOVED.
4. DIMENSIONS IN PARENTEHESES ARE METRIC.
5. WITH CABINET TOP COVER REMOVED, CABLE PROTECTION BEZEL OPENING IS 3.29 X 4.75 { 15.63 in^2 }.

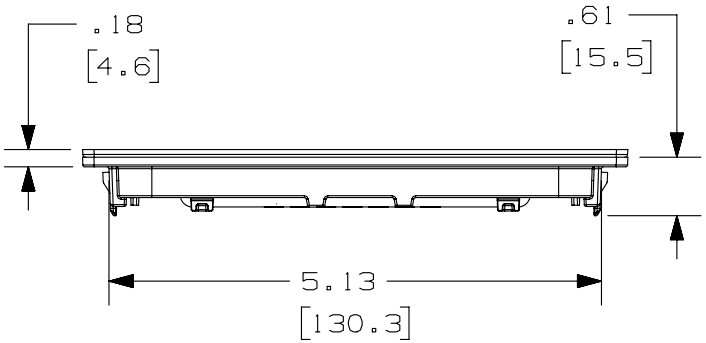

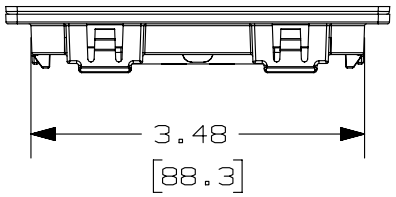

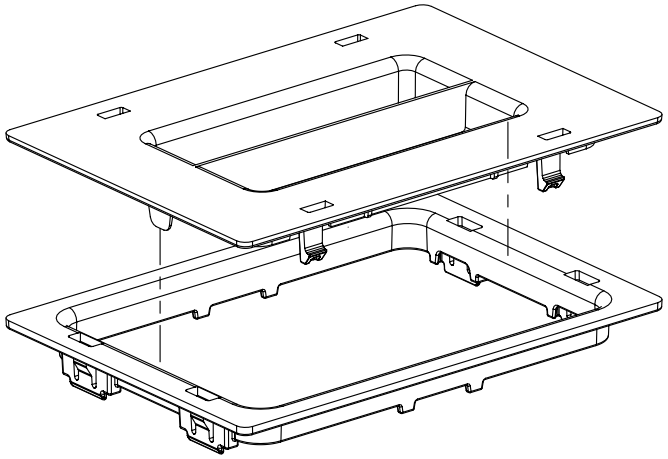

B

REV	DATE	BY	CHK	APR	DESCRIPTION	ECN
2	02-26-13	SSP	DWR	RN	RELEASED TO PRODUCTION B. REMOVED PRIOR NOTE(S)	12D286AA-DC

TITLE

3.5" X 5" CABINET TOP COVER AND CABLE PROTECTION BEZEL (CTCN3X5)

CUSTOMER DRAWING

ITEM REVISION NAME: 12D286AA/02

DATASET FILE NAME: 12D286AA_DC/02B CTCN3X5

UNLESS OTHERWISE SPECIFIED, DIMENSIONAL TOLERANCES ARE: IN [mm]

.X ± .XXX ±

.XX ± .03 [.8] ANGLES ±

THIRD ANGLE PROJECTION

MATERIAL: ABS

DRAWING NUMBER: 12D286AA-DC

DRAWN BY	DATE	CHK	SCALE	SHT 1 OF 1	SIZE
SSP	07-06-12	DWR	NONE		A

D10100DA/12