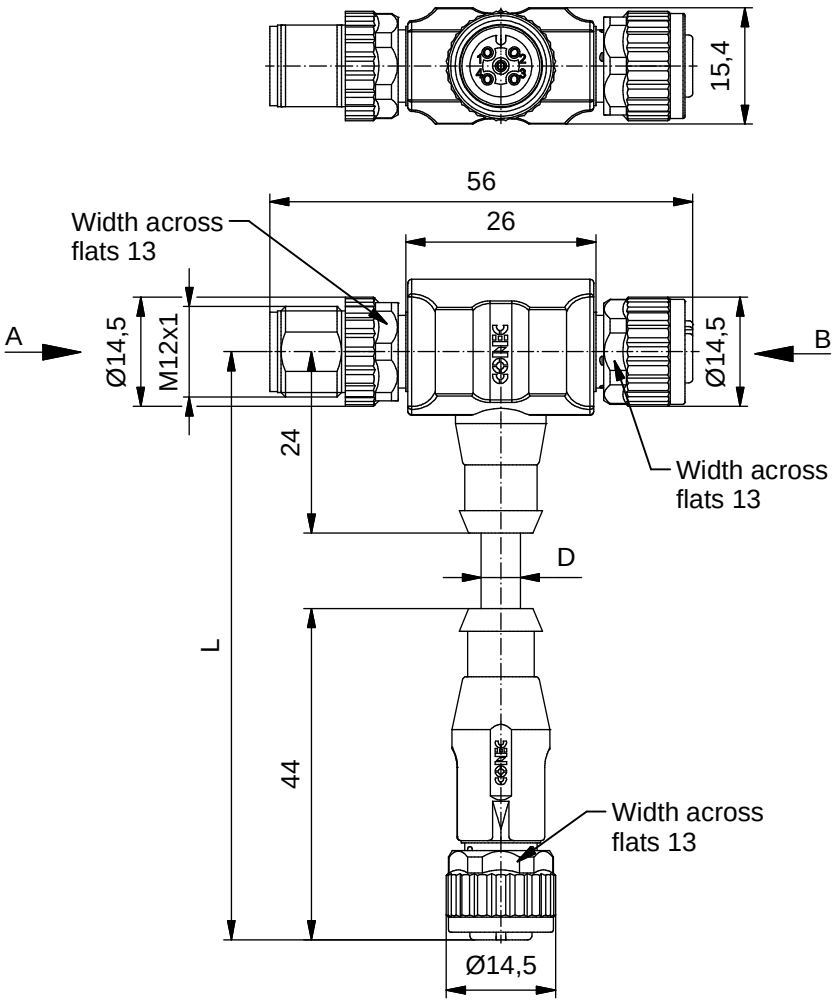

Technical specification:

Rated voltage: IEC 61076-2-101	60 V
Current rating: IEC 61076-2-101	4 A at 40℃
Insulation resistance: IEC 60512	>=100 MΩ
Pollution degree: IEC 60664-1	3/2
Degree of protection: IEC 60529	IP 67, in mated condition
Temperature range: IEC 60664-1	-30℃ ... +80℃
Mating cycles: IEC 60512-9a	>=100

Materials:

Contact:	CuZn
Contact plating:	Nickel, gold plated
Contact carrier:	TPU GF, UL 94
Sealing:	FPM
Coupling nut/ screw:	GD-Zn, nickel plated
Moulding body:	TPU, UL 94, grey

Installation specification:

Recommended torque:	0,6 Nm
Conec installation tool:	Torque wrench: 36-000200 Insert across flats 13: 36-000220

A

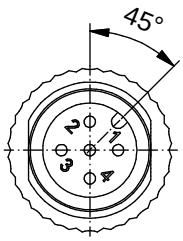

B

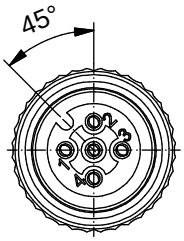

Contact assignment:

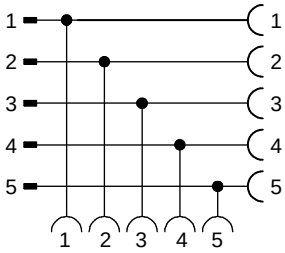

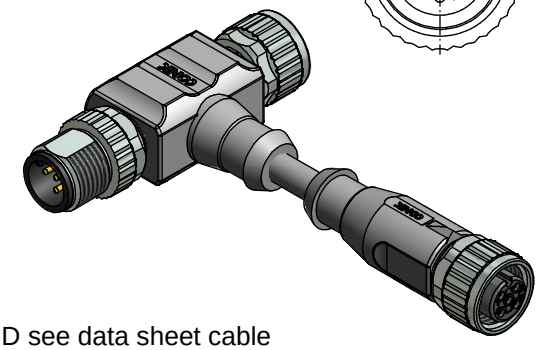

D see data sheet cable

Part no:	Description:	Length L:	Cable:
43-05118	SAL - 12 - TS5.1 - TK5.1 - RK5.1 - 0,3 / A1	0,3m	PVC, grey, 5x0,34mm² Cable: 781-A1350G
43-05119	SAL - 12 - TS5.1 - TK5.1 - RK5.1 - 0,6 / A1	0,6m	
43-xxxxx	SAL - 12 - TS5.1 - TK5.1 - RK5.1 - ... / A1	x	

DO NOT ALTER CAD DRAWING BY HAND

Directive 2002/95/EC RoHS compliant

Index: a 29.03.11 VF Ä3767
Coupling nut/ screw modified, spanner flats added, data sheet modified

tolerance of cable: L <= 4m: L + 40mm; L > 4m: L + 1%

general tolerance: 0 ± 0,50mm; 0,0 ± 0,25mm; 0,00 ± 0,10mm

THIS DRAWING MAY NOT BE COPIED OR REPRODUCED IN ANY WAY, AND MAY NOT BE PASSED ON TO A THIRD PARTY WITHOUT WRITTEN PERMISSION. OWNERSHIP AND COPYRIGHT OF CONEC GmbH

dim. in mm

	date	name
drawn	16.10.09	Fromm
appd.	16.10.09	Mankopf

title: T-Junction, male connector M12x1 - female connector M12x1 - female connector M12x1 axial

dwg no: 43K1A972

part no: see table