REVISIONS			
LTR	DESCRIPTION	DATE	APPROVED

NOTES: UNLESS OTHERWISE SPECIFIED

1. CONSTRUCTION:
   HOUSING & PLUNGER: MOLDED NYLON DUPONT ZYTEL 101L 10/11% GLASS FILLED. AVAILABLE IN TEN COLORS.
   CONTACT BLADE: STAINLESS STEEL, 304 FULL HARD. PASSIVATED PER MIL-S-5002 TYPE 1.
   COMPRESSION SPRING: STAINLESS STEEL 302, .009" DIA. WIRE PASSIVATED.

2. PERFORMANCE:
   MAXIMUM CURRENT: XX
   MAXIMUM VOLTAGE: XX
   MAXIMUM TEMPERATURE: XX

3. FEATURES:
   HOOK FITS COMPONENTS UP TO ø0.050" [1.27].
   PINS EXIT PLUNGER ON EITHER SIDE.
   PINS PERMIT CONNECTION TO 0.025" [0.64] SQ. OR ø0.030" [0.76] SOCKETS.

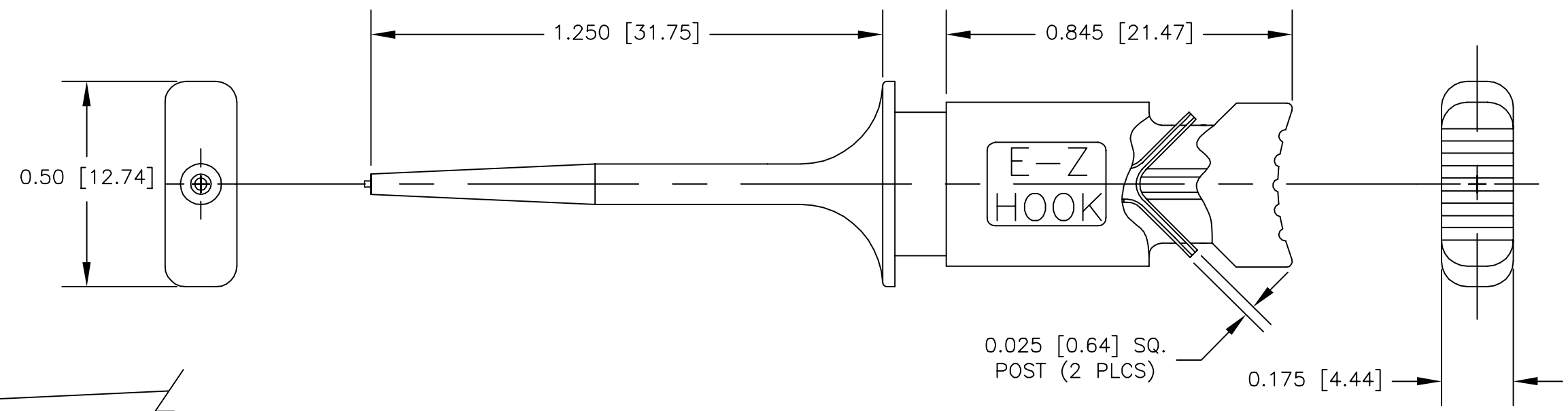

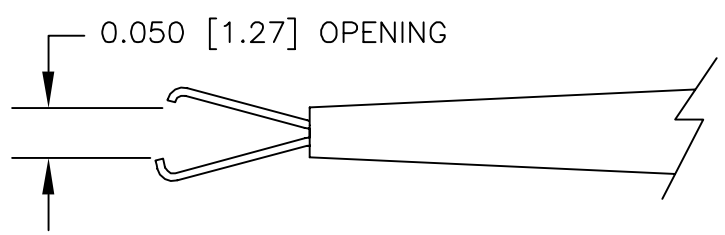

HOOK DETAIL
SCALE: 5:1

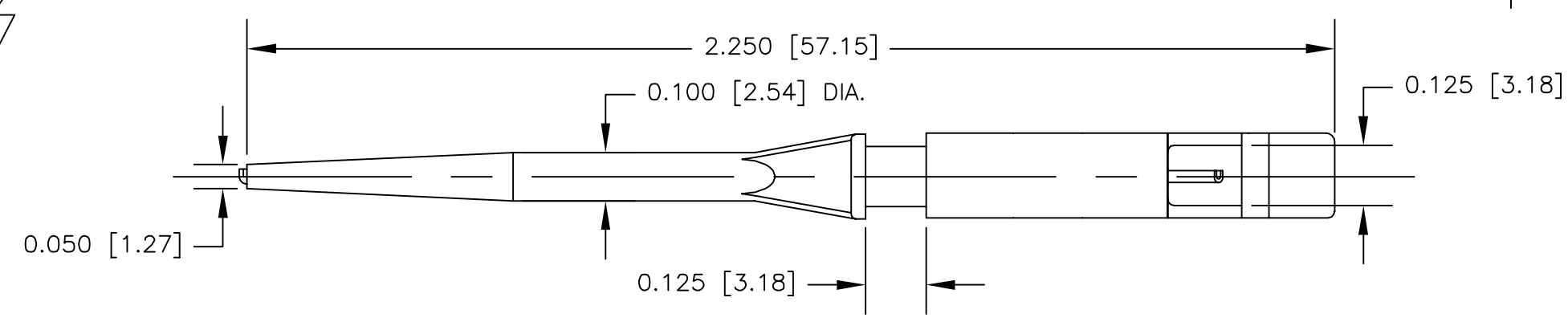

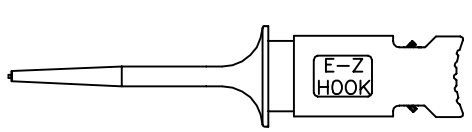

ACTUAL SIZE

		UNLESS OTHERWISE SPECIFIED DIMENSIONS ARE IN INCHES TOLERANCES ARE: FRACTIONS ± DECIMALS .XX ± .XXX ± ANGLES ±	CONTRACT NO.	
			APPROVALS	DATE
			DRAWN R.L.	6/09
		MATERIAL SEE NOTE.	APPROVED BY	
		FINISH SEE NOTE.		
NEXT ASSY	USED ON			
APPLICATION		DO NOT SCALE DRAWING		

E-Z-HOOK® DIVISION OF TEKTEST INC. ARCADIA, CA 91006 U.S.A.

DESCRIPTION
E-Z-MICRO HOOK GRIPPER TEST CONNECTOR

SIZE	CODE IDENT NO.	DRAWING NO.	REV.
B	08505	XKM	
SCALE 3:1		SHEET 1 OF 1	

THE INFORMATION CONTAINED IN THIS DOCUMENT IS PROPRIETARY TO E-Z-HOOK. THE INFORMATION IS NOT TO BE REPRODUCED WITHOUT PRIOR WRITTEN PERMISSION OF E-Z-HOOK, DIV. OF TEKTEST INC.
MAXIMUM TESTED RATINS IN A HANDS-FREE CONTROLLED ENVIRONMENT. MAXIMUM RATINGS ARE NOT TO BE USED CONCURRENTLY.