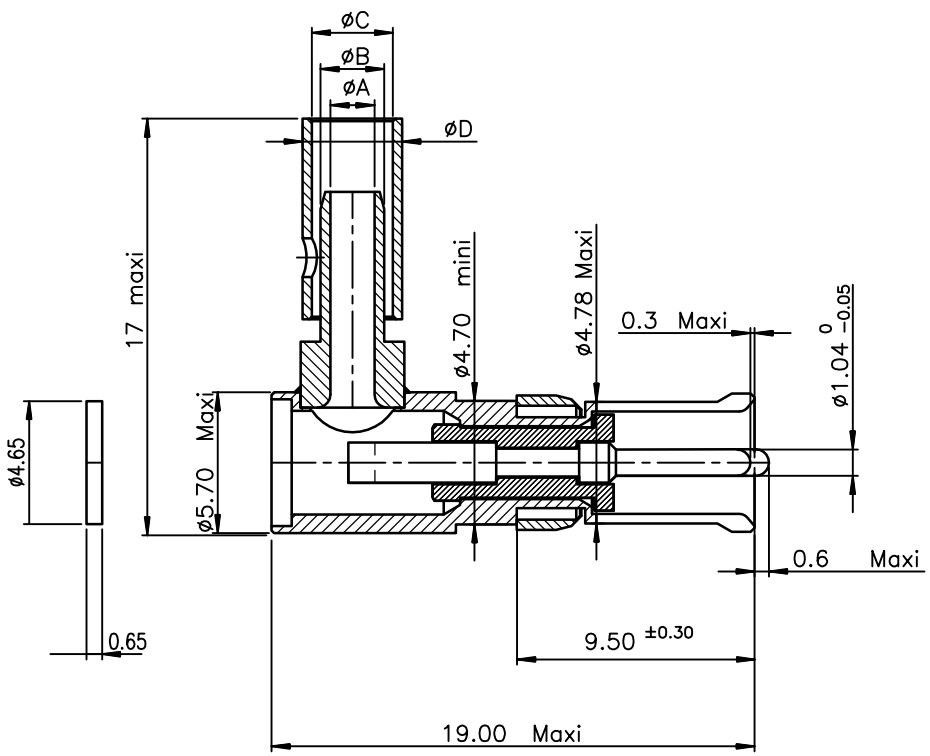

ELECTRICAL CHARACTERISTICS

- Impedance: 50 Ohm
- Working frequency: 1GHz max
- Dielectric with standing voltage: 600V
- Insulation resistance 5000: 14 Ohm
- Contact resistance < 5 mOhm
- Insertion lost: < 0.2 dB

MECHANICAL CHARACTERISTICS

- Mating force per set of contact 0.4 N to 9 N
- Mating endurance 500
- Temperature −55°C to +125 °C

TOOLING

- Coaxial contact extraction tool 8630−07A

NOTE:RoHS INFORMATIONS

- The "LF" product meets European union Directives and other country regulations as described in GS−22−008.
- The product is not intented to be exposed to a manufacturing solder process.
- Packaging spec: see GS−14−920.

PART NUMBER	DESIGNATION	øA +0.10 0	øB ±0.05	øC +0.10 0	øD ±0.10	CABLE REF.
DM537435000NCLF	RIGHT ANGLE SOCKET COAXIAL CONTACT	1.00	1.75	2.32	3.20	RG 178 B/U RG 196 A/U KX 21 A

rev	ecn no	dr	date
A	LS05−0086	MPE	2005/10/14
B	LS05−0107	MPE	2005/12/20
C	LS07−0001	MPE	2007/01/09
D	LS07−0160	MPE	2007/06/11
E	F10−0086	LSA	2010/08/20
−	−	−	−
−	−	−	−

www.fciconnect.com

Dr	PESSON	2005/10/14
Eng	PESSON	2005/10/14
Chr	LEGARE	2005/10/14
Appr	LEGARE	2005/10/14

surface ISO 1302 — tolerance std ISO 406 ISO 1101 — projection — mm

TOLERANCES UNLESS OTHERWISE SPECIFIED

ANGULAR		LINEAR	
0.XX°	±2'	0.X	±0.1
		0.XX	±0.1
		0.XXX	±0.1

size A3 — Scale 5

ECN F10−0086

Product family D−SUB — Spec ref −

title: RIGHT ANGLE SOCKET COAXIAL CONTACT SOLDER TO CABLE

dwg no C01−8639−2149 — Rev. E

catalog no — CUSTOMER — sheet 1 of 1

Copyright FCI.

REV F − 2006−04−17

PDM: Rev:E STATUS: Released Printed: Oct 01, 2010