(5 : 1)

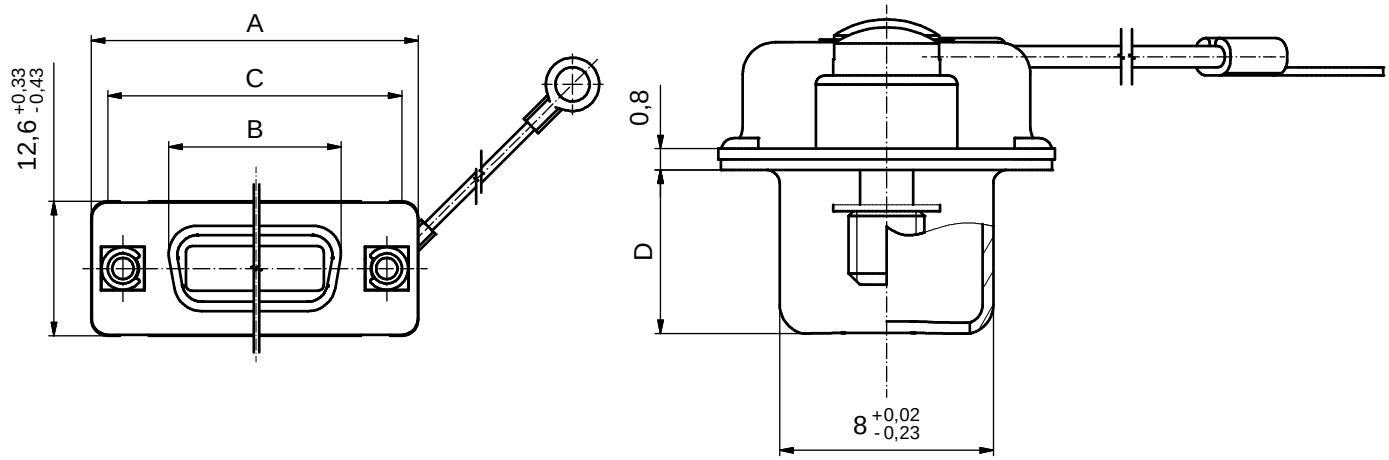

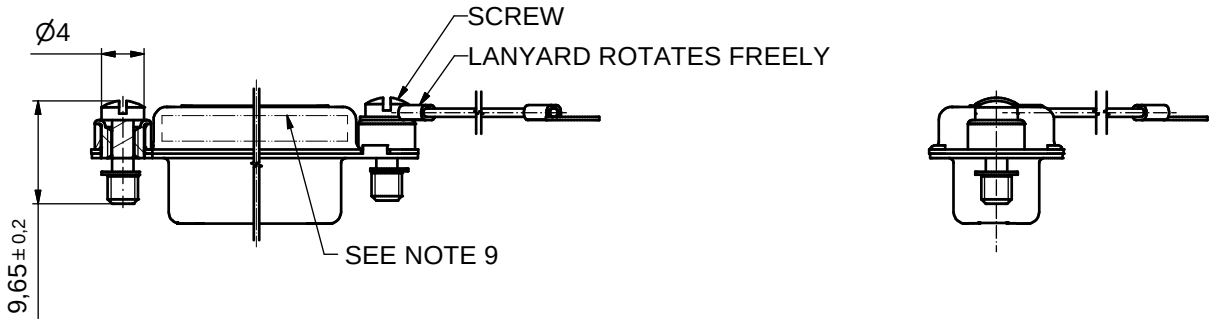

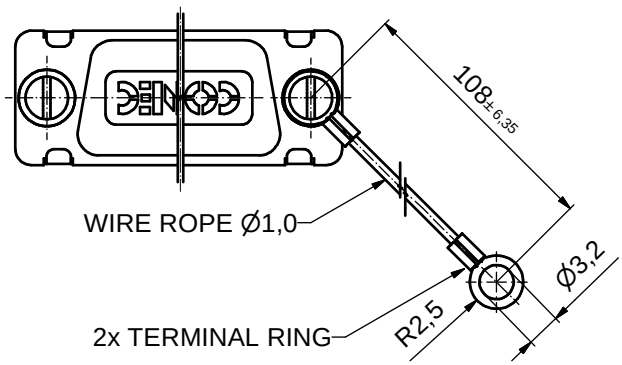

No. of pos.	A -0,76	B -0,25	C	D -0,3
9	31,19	16,46	25,00 +0,12 -0,10	6,12
15	39,52	24,79	33,30 +0,15	6,12
25	53,42	38,50	47,04 ± 0,13	5,99
37	69,70	54,96	63,50 +0,13 -0,11	5,99

Directive 2002/95/EC „RoHS" Compliant

Part No. for plug connector		
No.of pos.	UNC 4-40	M 3
9	16-001150	16-001100
15	16-001160	16-001110
25	16-001170	16-001120
37	16-001180	16-001130

NOTES:

1. METALSHELLS: STEEL; min. 315µin TIN over 40-80µin NICKEL
2. THREADED INSERT: COPPER ALLOY; min. 200µin TIN over 80µin NICKEL
3. COLLAR: COPPER ALLOY; min. 200µin TIN over 80µin NICKEL
4. SCREW: STEEL; NICKEL PLATED
5. WIRE ROPE: STAINLESS STEEL 1.4401
6. RETAINING WASHER: STAINLESS STEEL 1.4122
7. TERMINAL RING: UNINSULATED, COPPER ALLOY; min. 200µinTIN over 80µin NICKEL
8. MAXIMUM TORQUE VALUE FOR THREAD: 6in.LB
9. CONNECTOR IS PART MARKED: PART NO. CONEC ABC

APPROVAL # FREIGABE # DEBLOCAGE # AUTORIZACION # APPROVAL

CUSTOMER APPROVAL DATE:

NAME: TITLE:

COMPANY NAME:

THIS DRAWING MAY NOT BE COPIED OR REPRODUCED IN ANY WAY, AND MAY NOT BE PASSED ON TO A THIRD PARTY WITHOUT WRITTEN PERMISSION. OWNERSHIP AND COPYRIGHT OF CONEC GmbH

DO NOT ALTER CAD DRAWING BY HAND

rev.	description	date	name
a	Origin		

tolerance ISO 2768-m

dim. in mm

	date	name
drawn	20.11.08	Petker
appd.	20.11.08	Fischer
norm		
d-old		

CONEC

scale: 2:1 (5:1)

material: SEE NOTES

title:

SCREN CAP

9-37pos. FOR PLUG CONNECTOR

with threaded insert, screw and wire rope

dwg no: 16K1A2402

Inventor 10

DIN-A3

sh: 1

part no: see table