NMB™

NMBTC.COM / 818.341.3355

NEW!

R200 (ø200 X 51L)

Characteristic Curves

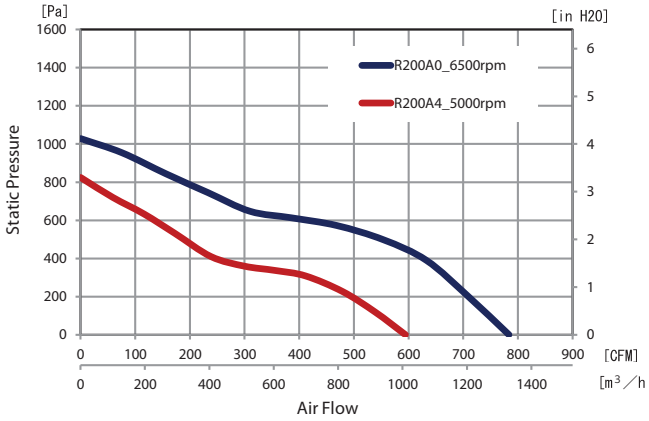

General Specifications

Motor Protection:
Locked Rotor, Reverse Polarity

Insulation Resistance:
10M Ω min measured with 500V DC between all leads shorted together and case

Dielectric Withstand Voltage: AC 500V 1 minute

Allowable Ambient Temperature Range:
-30°C ~ +70°C (Operating)
-40°C ~ +80°C (Storage)

Outline

Units: [inch] / mm

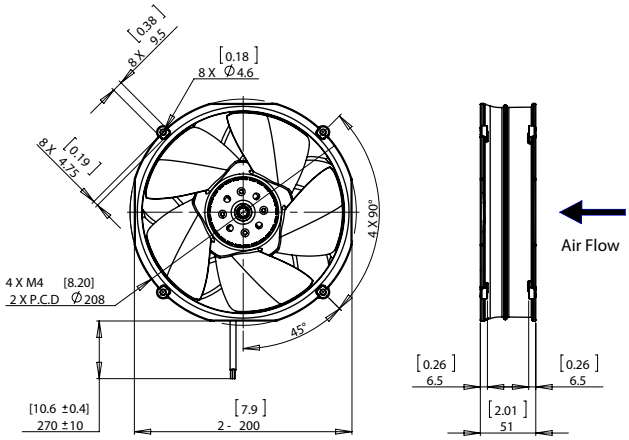

Expected Life

L10 Life:
40°C 70,000 Hours

Material

Casing : Aluminum
Impeller : Plastic
Bearing : Ball Bearing
Lead Wire : UL3266, AWG20, +Red, -Black,
Speed Control = Yellow AWG22
Speed Signal = White AWG22

Specifications

MODEL	Rated Voltage	Operating Voltage	Current	Input Power	Speed	Max. Air Flow		Max. Static Pressure		Noise	Mass
	(V)	(V)	(A)*1	(W)*1	(min^{-1})*1	CFM*1	(m^3/hr)*1	in H_2O	(Pa)*1	(dB)*1	(g)
R200A0-051-D0760	48	30 ~ 72	2.9	139	6500	783	1330	4.12	1028	74	1200
R200A4-051-D0550	24	18 ~ 30	2.8	67	5000	590	1002	3.32	828	67	1200

Rotation: Counterclockwise looking at air inlet

*1: Average Values in Free Air and Rated Voltage Condition

High Power Fans