used for: DIN EN 60603 TYPE "D"

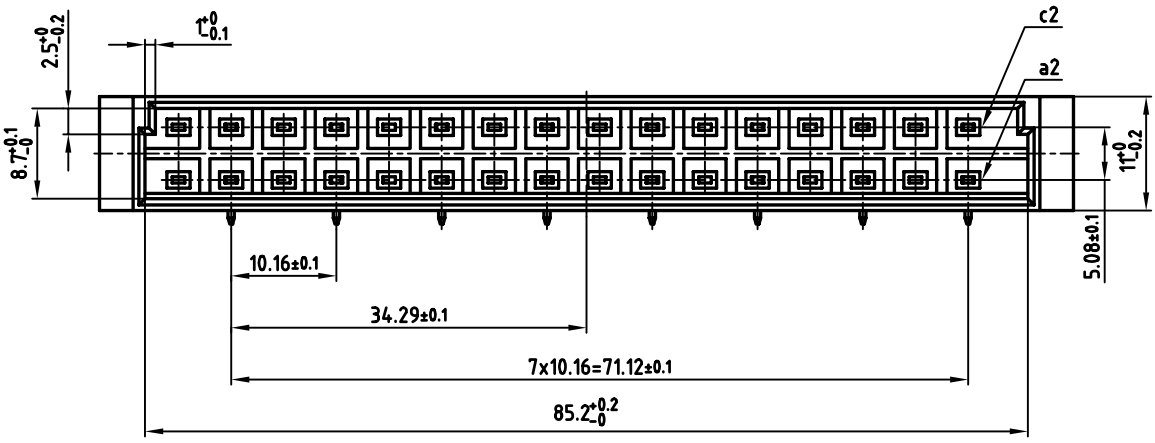

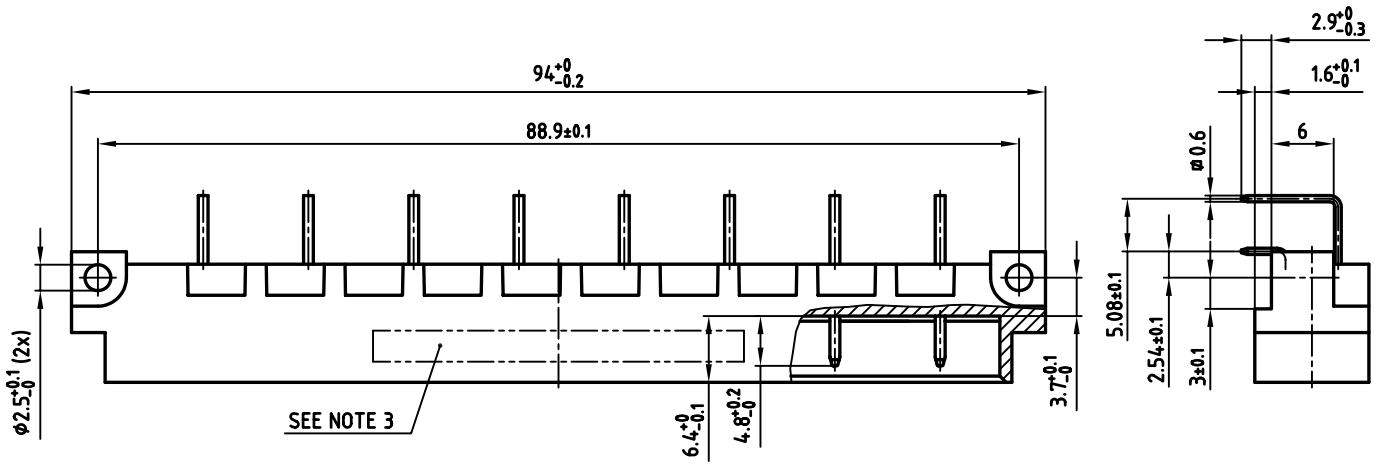

NOTES:

1. INSULATORS: PBTP GF UL 94 V-0, GREY
2. CONTACTS: COPPER ALLOY
   PLATING: GOLD OVER NICKEL
   50 MATING CYCLES
3. CONNECTOR IS PART MARKED: 121A10639X CONEC ABC

Directive 2002/95/EC „RoHS" Compliant

P.C.B.-HOLE DRILLINGS

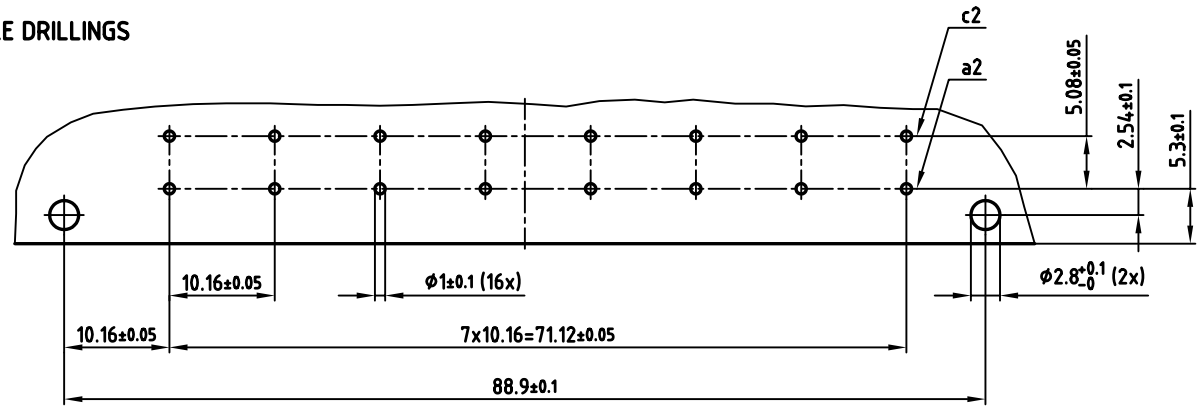

APPROVAL # FREIGABE # DEBLOCAGE # AUTOR/ZACION # APPROVAL

CUSTOMER APPROVAL DATE:

NAME: TITLE:

COMPANY NAME:

THIS DRAWING MAY NOT BE COPIED OR REPRODUCED IN ANY WAY, AND MAY NOT BE PASSED ON TO A THIRD PARTY WITHOUT WRITTEN PERMISSION. OWNERSHIP AND COPYRIGHT OF CONEC GmbH

DO NOT ALTER CAD DRAWING BY HAND

rev.	description	date	name

tolerance

dim. in mm

2005	date	name
drawn	04.11.	Lehmenkühler
appd.	04.11.	Mickenbecker
norm	DIN EN 60603	
d-old		

CONEC®

scale: 2:1

material: SEE NOTES

title: MALE CONNECTOR TYPE "D"
16pos. ANGLED

dwg no: 12K1A405

AutoCAD 2004 | DIN-A 3 | sh: 1/1

part no: 121A10639X