MICRO SWITCH
a Honeywell Division
FED.MFG.CODE 91929

SWITCH – BASIC

CATALOG LISTING
V3L–708
CQ–H0711

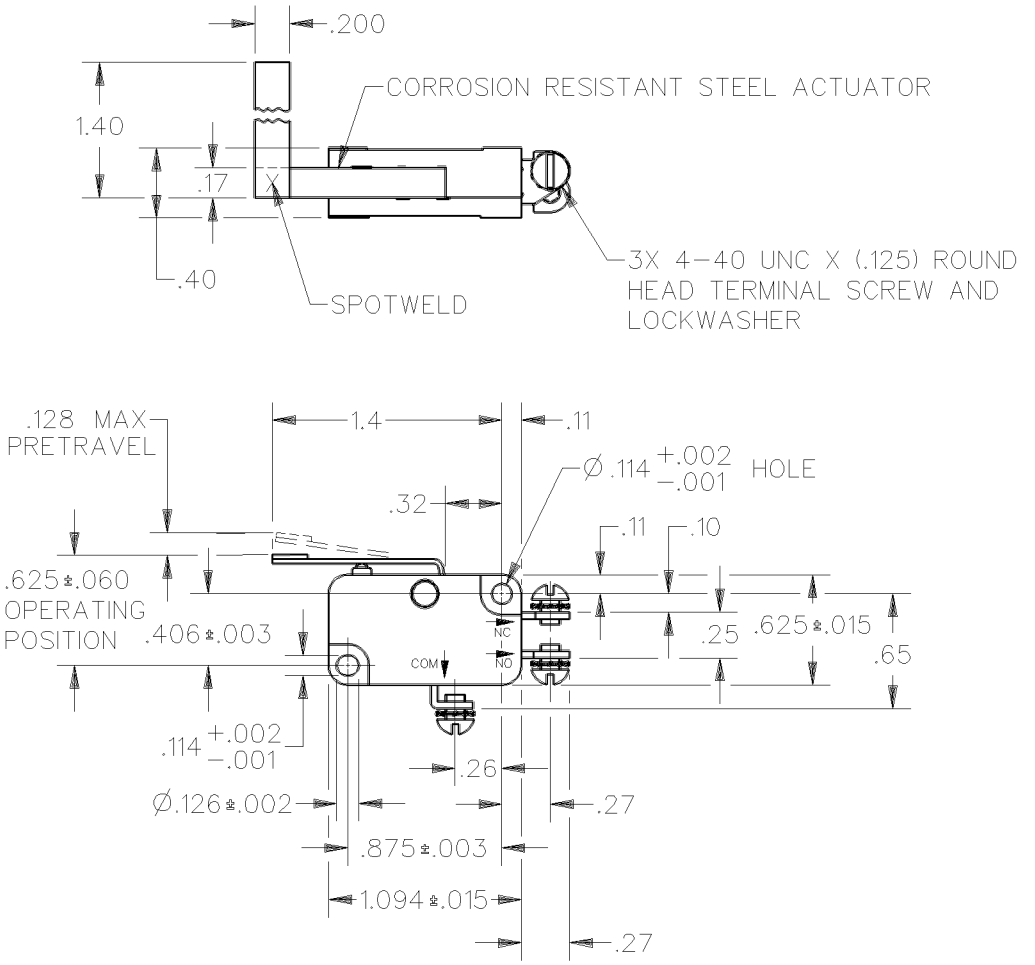

ANSI Y14.5M–1982 APPLIES

THIS DRAWING COVERS A PROPRIETARY ITEM AND IS THE PROPERTY OF MICRO SWITCH, A DIVISION OF HONEYWELL. THIS DRAWING IS NOT TO BE COPIED OR USED WITHOUT THE APPROVAL OF MICRO SWITCH.

THIRD ANGLE PROJECTION

CHARACTERISTICS	ELECTRICAL DATA	SCALE FULL / DO NOT SCALE PRINT
OPERATING FORCE — — — — 4 OZ MAX	CONTACT ARRANGEMENT S P D T	UNLESS OTHERWISE SPECIFIED TOLERANCES ARE
RELEASE FORCE — — — — 1/2 OZ MIN		ONE PLACE (.0) ±.030
DIFFERENTIAL TRAVEL — — — .050 MAX	L156 11A 1/3HP 125, 250 OR 277 VAC	TWO PLACE (.00) ±.015
OVERTRAVEL — — — — — — .080 MIN	1/2A 125 VDC, 1/4A 250 VDC	THREE PLACE (.000) ±.005
RELEASE TRAVEL — — — — — .013 MIN	4A 125 VAC "L"	ANGLES ±
		WEIGHT

CATALOG LISTING V3L–708 PAGE 1 OF 1
ISSUE 6
REPLACES
RELEASE NO. PR–12429

REVISIONS

A	OBS C07995C	CSL 15 MAR 95
B	REINST PR21678	DCS 1 JUN 95

CHECK
CHECK
CHECK
DRAWN DDM/CAD DCS 1 JUN 95