SERPAC Electronics Enclosures A-31,9V

NOTES:

1. WHEN MACHINE OR I PLATES MODIFICATIONS ARE REQUIRED, USE THE CENTER OF THE BOX TO DIMENSION.

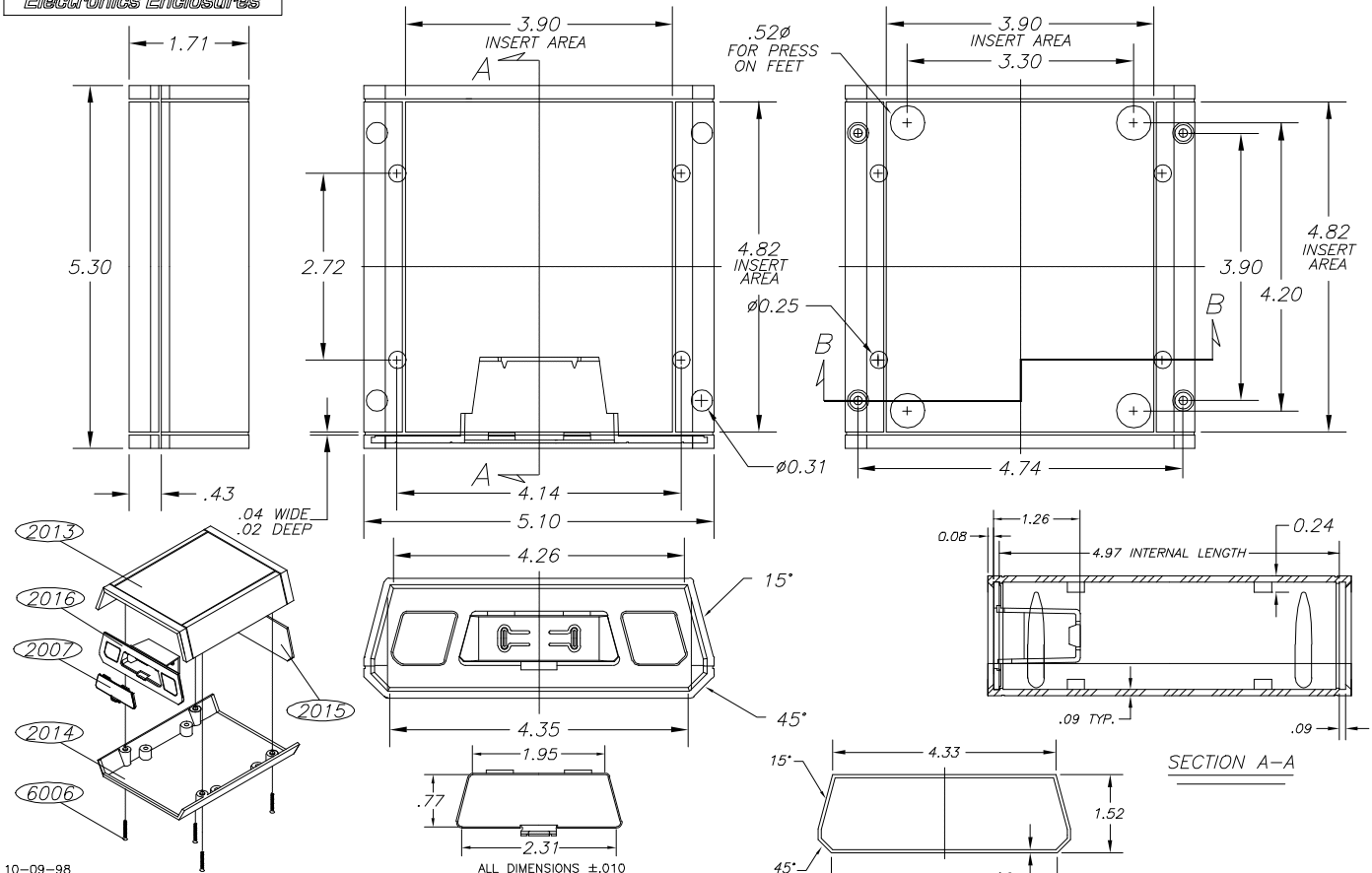

10–09–98

ALL DIMENSIONS ±.010

PART NO.	DESCRIPTION	PART NO.	ACCESSORIES
2013	PLASTIC TOP	51	PRESS ON FEET
2015	PLASTIC END PANEL	2015IR	INFARED PANEL
2016	9V BATTERY ACCES PANEL	2015CL	CLEAR & TRANSPARENT RED PANELS
2014	PLASTIC BOTTOM	2015DB9	9 PIN CONNECTOR END PANEL
6006	SCREW	2015DB25	25 PIN CONNECTOR END PANEL

619 Commercial Ave. Covina, CA 91723
(626) 331-0517 Fax (626) 331-8584 http://www.serpac.com.