BUD	PART NAME	PTQ SERIES ENCLOSURE	PART No.	PTQ-11046 & PTQ-11046-C	REVISION DATE	12-2-15

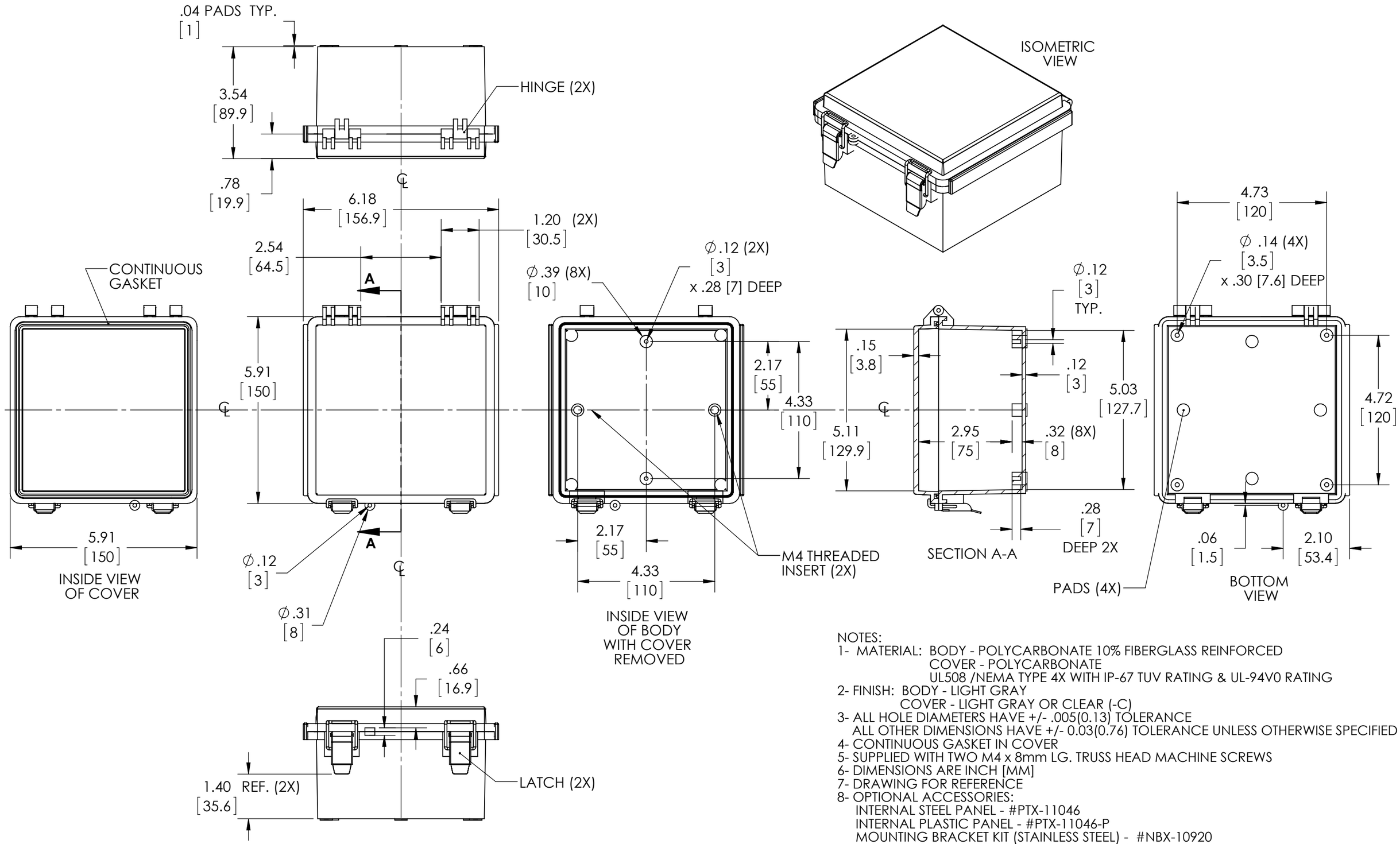

NOTES:
1- MATERIAL: BODY - POLYCARBONATE 10% FIBERGLASS REINFORCED
COVER - POLYCARBONATE
UL508 /NEMA TYPE 4X WITH IP-67 TUV RATING & UL-94V0 RATING
2- FINISH: BODY - LIGHT GRAY
COVER - LIGHT GRAY OR CLEAR (-C)
3- ALL HOLE DIAMETERS HAVE +/- .005(0.13) TOLERANCE
ALL OTHER DIMENSIONS HAVE +/- 0.03(0.76) TOLERANCE UNLESS OTHERWISE SPECIFIED
4- CONTINUOUS GASKET IN COVER
5- SUPPLIED WITH TWO M4 x 8mm LG. TRUSS HEAD MACHINE SCREWS
6- DIMENSIONS ARE INCH [MM]
7- DRAWING FOR REFERENCE
8- OPTIONAL ACCESSORIES:
INTERNAL STEEL PANEL - #PTX-11046
INTERNAL PLASTIC PANEL - #PTX-11046-P
MOUNTING BRACKET KIT (STAINLESS STEEL) - #NBX-10920
MOUNTING BRACKET KIT (PLASTIC) - #PIX-4117