THIS DRAWING IS UNPUBLISHED. RELEASED FOR PUBLICATION -,- .
© COPYRIGHT - BY TE CONNECTIVITY CORPORATION. ALL RIGHTS RESERVED.

LOC	DIST
AA	22

REVISIONS

P	LTR	DESCRIPTION	DATE	DWN	APVD
	B	ECO-08-017729	03Sep2008	QL	TX
	C	ECO-11-015773	30OCT2011	EL	LR

MECHANICAL:

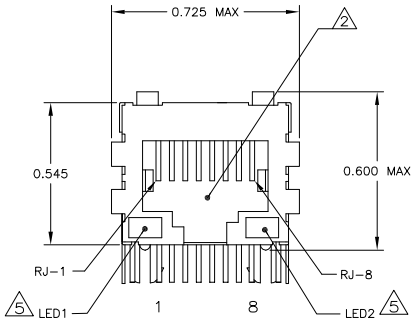

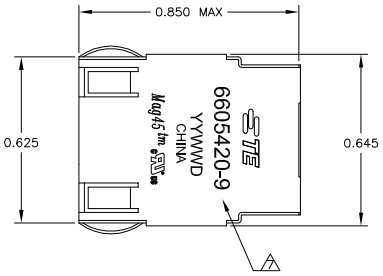

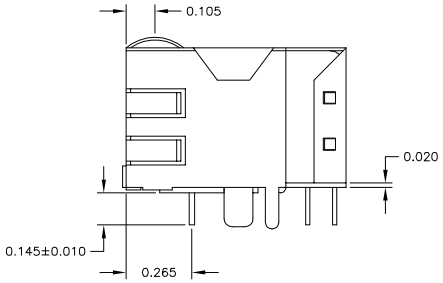

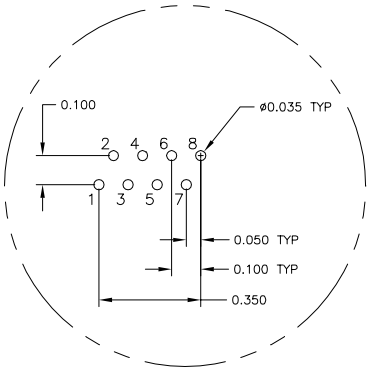

Pin Designations

1. MATERIALS:
HOUSING - THERMOPLASTIC PET POLYESTER FLAMMABILITY RATING UL 94V-0.
SHIELD - .010" THICK, C26800 BRASS PREPLATED WITH 30µINCH MIN SEMI-BRIGHT NICKEL. SOLDER TABS POST DIPPED WITH 100µINCH MIN SAC SOLDER.
MOD JACK CONTACTS - 0.0157 X 0.018" PHOSPHOR BRONZE, 50µINCH MIN OVERALL NICKEL UNDERPLATE WITH SELECT 50µINCH MIN HARD GOLD FINISH PLATE.
SOLDERTAILS WITH 100µINCH MIN MATTE TIN AND/OR SAC SOLDER DIP.
LIGHT EMITTING DIODE(LED) - DIFFUSED EPOXY LENS, .020" X .020" CARBON STEEL WIREFRAME LEADS PRE-PLATED WITH 80µINCH SILVER OVER 40µINCH NICKEL UNDERPLATE OVER 40µINCH COPPER UNDERPLATE. POST-PLATED WITH 100µINCH MIN MATTE TIN AND/OR SAC SOLDER DIP OR PURE TIN SOLDER DIP.

2. RJ45 JACK CAVITY CONFORMS TO FCC RULES AND REGULATIONS PART 68, SUB PART F.

3. MAGNETICS
-APPLICATION: 10/100 BASE-T
-IMPEDANCE: 100 OHMS
-TURNS RATIO (CHIP:CABLE): TX = 1:1.41, RX = 1:1
-OPEN CIRCUIT INDUCTANCE (OCL): 350µH MIN @100kHz, 0.1VRMS, 8mADC BIAS FROM 0°C TO 70°C, TX AND RX
-PERFORMANCE @ 25°C:
INSERTION LOSS (IL): 1.1dB MAX FROM 0.5MHz TO 100MHz
RETURN LOSS (RL): 18dB MIN FROM 0.5MHz TO 30MHz
18-20LOG(f/30)dB MIN FROM 30.1MHz TO 60MHz
12dB MIN FROM 60.1MHz TO 80MHz
CROSSTALK ATTENUATION: 35dB MIN FROM 0.5MHz TO 40MHz
33-20LOG(f/50)dB MIN FROM 40.1MHz TO 100MHz
COMMON MODE REJECTION RATIO (CMRR): 30dB MIN FROM 0.5MHz TO 100MHz
-ISOLATION VOLTAGE:1500VAC (MAX) AT 60Hz FOR 60 SECS.

4. OPERATING TEMPERATURE: FROM 0°C TO +70°C

5. LEDS WITHOUT BUILT-IN RESISTOR
LEDS ARE DRIVEN WITH CONSTANT CURRENT AT APPROX 20 mA
LED COLOR: DOMINANT WAVELENGTH (λ D): GREEN 568 nm TYP @ IF=20 mA
FORWARD VOLTAGE (VF): GREEN 2.2V TYP @ IF=20 mA
DOMINANT WAVELENGTH (λ D): YELLOW 588 nm TYP @ IF=20 mA
FORWARD VOLTAGE (VF): YELLOW 2.1V TYP @ IF-20 mA

6. INDICATED CONNECTIONS ARE FOR NIC CONFIGURATION. THE MAGNETICS ARE ASYMMETRIC, AND DO NOT SUPPORT AUTO-MDI/MDIX.

7. TE CONNECTIVITY LOGO, PART NUMBER, DATE CODE, COUNTRY OF ORIGIN AND AGENCY APPROVAL MARKING IN APPROXIMATE LOCATION SHOWN.

8. THE PART IS RECOMMENDED FOR WAVE SOLDERING PROCESS, PEAK WAVE SOLDERING TEMPERATURE IS 260°C, 10SECONDS MAX.

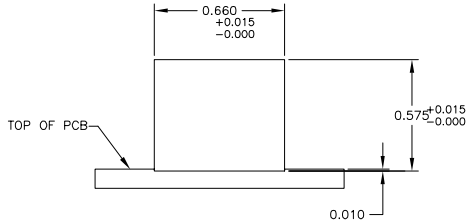

Suggested Panel Cutout

422 SERIES MAGNETIC CIRCUIT 3 6

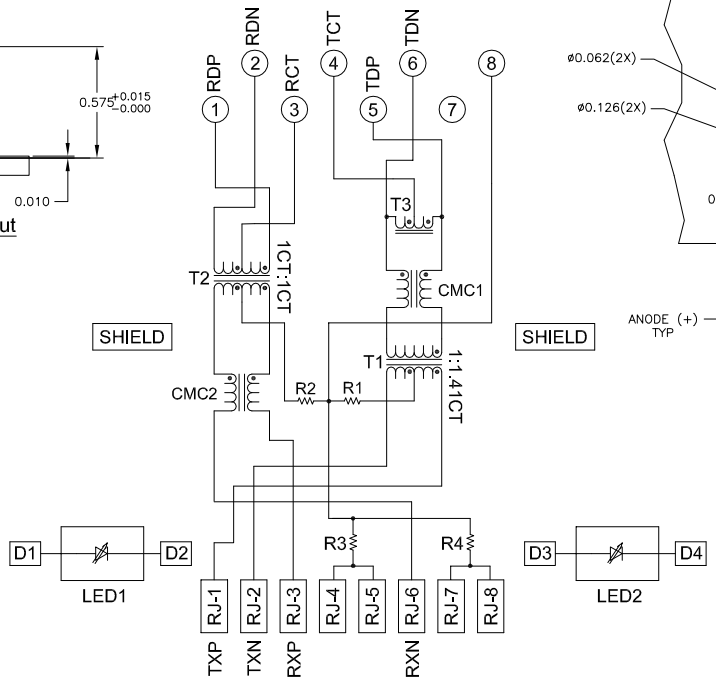

R1-R4 = 75 OHMS, 1/16 W RESISTORS

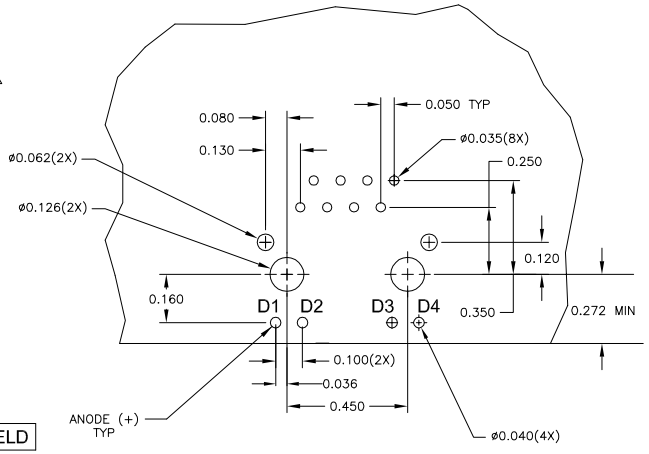

Suggested PCB Layout
(Component Side)

YELLOW	GREEN	6605420-9
LED1	LED2	PART NUMBER

THIS DRAWING IS A CONTROLLED DOCUMENT.

DIMENSIONS: INCHES

TOLERANCES UNLESS OTHERWISE SPECIFIED:
0 PLC ± -
1 PLC ± -
2 PLC ± .010
3 PLC ± .005
4 PLC ± -
ANGLES ± -

MATERIAL 1

FINISH 1

DWN G. ATTADIA - 08MAR2005 DOCK5
CHK D. FAROLE 08MAR2005
APVD D. FAROLE 08MAR2005
PRODUCT SPEC 108-2100
APPLICATION SPEC —
WEIGHT —

TE Connectivity

NAME 1X1 MAG45(TM), 4N4 SCHEMATIC, 422 SERIES CIRCUIT, SHIELDED, WITH YELLOW/GREEN LEDS

SIZE A1 | CAGE CODE 00779 | DRAWING NO C-6605420 | RESTRICTED TO —

CUSTOMER DRAWING | SCALE NTS | SHEET 1 OF 1 | REV C