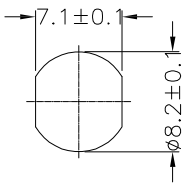

Recommended Panel Cut-Out

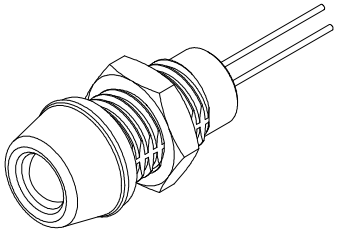

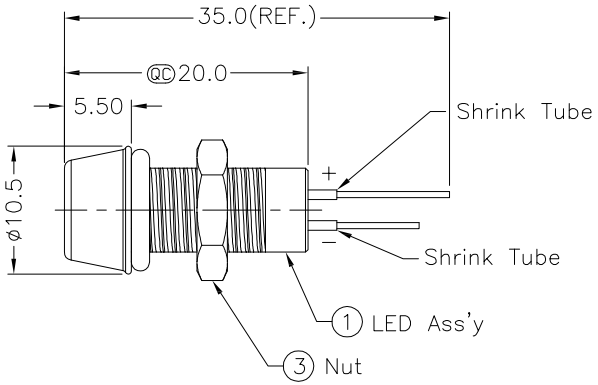

Notes:

QC Important Dimension To Check

Waterproof Rate: IP67

LED Holder:Brass, Nickel Plating

LED: ø3 mm,Green

Gasket:EPDM,Black

Screw Nut:Brass, Nickel Plating

Operating Voltage: DC 4V

Operating Temperature:−40~+80°C

For Panel Thickness 6.5mm Max.

1 Nut Torque:2.5~3.5kgf.cm

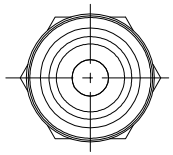

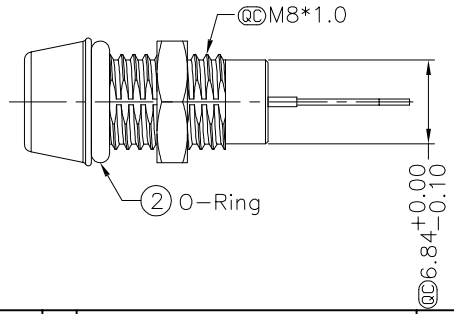

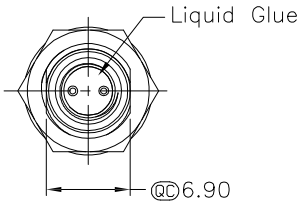

RoHS compliant

Scale	Free
TOLERANCE	
.X	±0.25
.XX	±0.10
.XXX	±0.05
Angle	±1°

Id.	Modification	Date	Name
1	Add the nut torque	07.05.2014	Winnie
0	Drawn	11.03.2014	Winnie

	Date	Name
Drawn	11.03.2014	Winnie
Approved	07.05.2014	Winnie

ASSMANN WSW components

Customer-No.

ASSMANN WSW-No.
A-LED8-1GAAS-MR7-1

Drawing-No.
ASS 6228 CO

rev01

Replace

Sheet