THIS DRAWING IS UNPUBLISHED. RELEASED FOR PUBLICATION , .
© COPYRIGHT By – ALL RIGHTS RESERVED.

| LOC | DIST |
|---|---|
| J | |

REVISIONS

| P | LTR | DESCRIPTION | DATE | DWN | APVD |
|---|---|---|---|---|---|
| | A1 | REVISED PER ECO-11-005033 | 25MAR11 | RK | HMR |

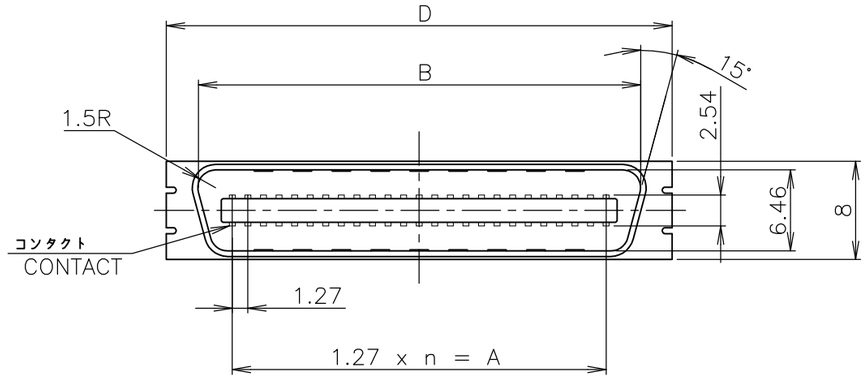


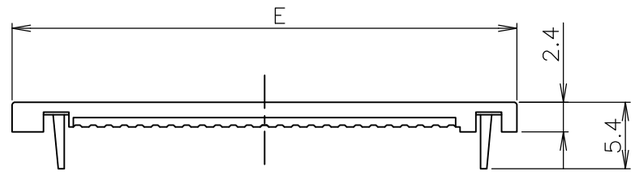


COVER HOUSING
(2EA/KIT)

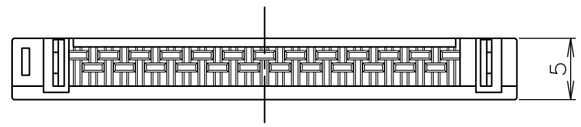


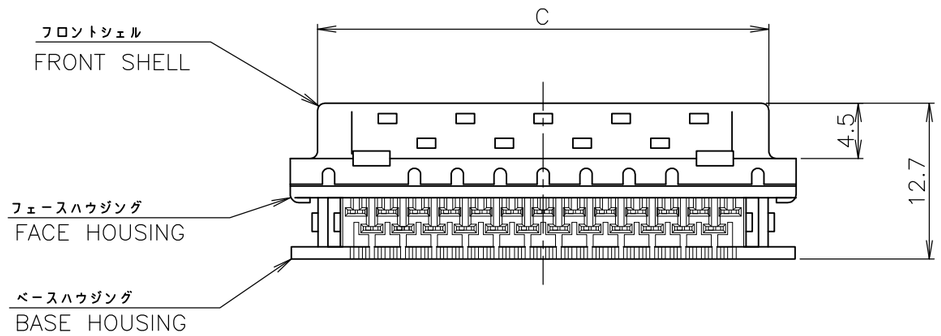


| A | B | C | D | E | Au.PLATING | n | POS | PART No. |
|---|---|---|---|---|---|---|---|---|
| 49.53 | 54.69 | 55.7 | 60.3 | 60.2 | 0.76u | 39 | 80 | 3-5175677-0 |
| 62.23 | 67.45 | 68.4 | 73.0 | 72.9 | 0.76u | 49 | 100 | 2-5175677-9 |
| 41.91 | 47.13 | 48.0 | 52.7 | 52.6 | 0.76u | 33 | 68 | 2-5175677-8 |
| 30.48 | 35.70 | 36.6 | 41.3 | 41.2 | 0.76u | 24 | 50 | 2-5175677-7 |
| 21.59 | 26.81 | 27.7 | 32.4 | 32.3 | 0.76u | 17 | 36 | 2-5175677-5 |
| 15.24 | 20.46 | 21.4 | 26.0 | 25.9 | 0.76u | 12 | 26 | 2-5175677-4 |
| 11.43 | 16.65 | 17.6 | 22.2 | 22.1 | 0.76u | 9 | 20 | 2-5175677-2 |
| 7.62 | 12.84 | 13.7 | 18.4 | 18.3 | 0.76u | 6 | 14 | 2-5175677-1 |
| 49.53 | 54.69 | 55.7 | 60.3 | 60.2 | 0.3 u | 39 | 80 | 1-5175677-0 |
| 62.23 | 67.45 | 68.4 | 73.0 | 72.9 | 0.3 u | 49 | 100 | 5175677-9 |
| 41.91 | 47.13 | 48.0 | 52.7 | 52.6 | 0.3 u | 33 | 68 | 5175677-8 |
| 30.48 | 35.70 | 36.6 | 41.3 | 41.2 | 0.3 u | 24 | 50 | 5175677-7 |
| 21.59 | 26.81 | 27.7 | 32.4 | 32.3 | 0.3 u | 17 | 36 | 5175677-5 |
| 15.24 | 20.46 | 21.4 | 26.0 | 25.9 | 0.3 u | 12 | 26 | 5175677-4 |
| 11.43 | 16.65 | 17.6 | 22.2 | 22.1 | 0.3 u | 9 | 20 | 5175677-2 |
| 7.62 | 12.84 | 13.7 | 18.4 | 18.3 | 0.3 u | 6 | 14 | 5175677-1 |

NOTE

1. MATERIAL & FINISH
   *CONTACT;COPPER ALLOY Au PL.0.3 AND 0.76 MIN. AT CONTACT AREA AND TIN PL. AT I.D. AREA OVER Ni PL.
   *FRONT SHELL; STEEL, Ni PL.
   *HOUSING(BASE,FACE,COVER); THERMO-PLASTIC,GF,UL 94V-0. BLACK
2. APPLICABLE WIRE;PLEASE CONFIRM TO TE CONNECTIVITY ENGINEERING.

THIS DRAWING IS A CONTROLLED DOCUMENT.

TOLERANCES UNLESS OTHERWISE SPECIFIED 一般公差
10≧ : ±0.2
30≧ >10 ±0.25
100≧ >30 ±0.3
ANGLES ±3°

DIMENSIONS: mm

TOLERANCES UNLESS OTHERWISE SPECIFIED:
0 PLC ±
1 PLC ±
2 PLC ±
3 PLC ±
4 PLC ±
ANGLES ±

MATERIAL: SEE NOTES
FINISH: SEE NOTES

| WIRE RANGE | INSULATION DIA |
|---|---|
| 7/0.127mm(AWG#28) | 0.5~0.7 mmø |

DWN COREL.WANG 19APR05
CHK STEVEN YAO 19APR05
APVD I.ENOMOTO 19APR05
PRODUCT SPEC
APPLICATION SPEC
WEIGHT

TE Connectivity

NAME: CHAMP .050 PLUG CONN. KIT

| SIZE | CAGE CODE | DRAWING NO | RESTRICTED TO |
|---|---|---|---|
| A3 | 00779 | C-5175677 | — |

CUSTOMER DRAWING | SCALE 2:1 | SHEET 1 OF 1 | REV A1